Better Homes and Gardens®

WOOD®

12/57

8 Scrollsaw Ornaments
See page 66

THE WORLD'S LEADING WOODWORKING MAGAZINE

DECEMBER 1992 • ISSUE NO. 57
Please display until December 7

WOOD LOOKS AT 13 BISCUIT JOINERS

TECHNIQUES

BISCUIT-JOINERY BASICS

START-TO-FINISH BOWL TURNING

HOLIDAY PROJECTS

- Toy train
- Carved Santa
- Flashy desk set
- Toy periscope
- Classic bookends
- Turned ornaments

SANTA'S GIFT IDEAS

Page 54

12
$4.95
0 71486 14072 6

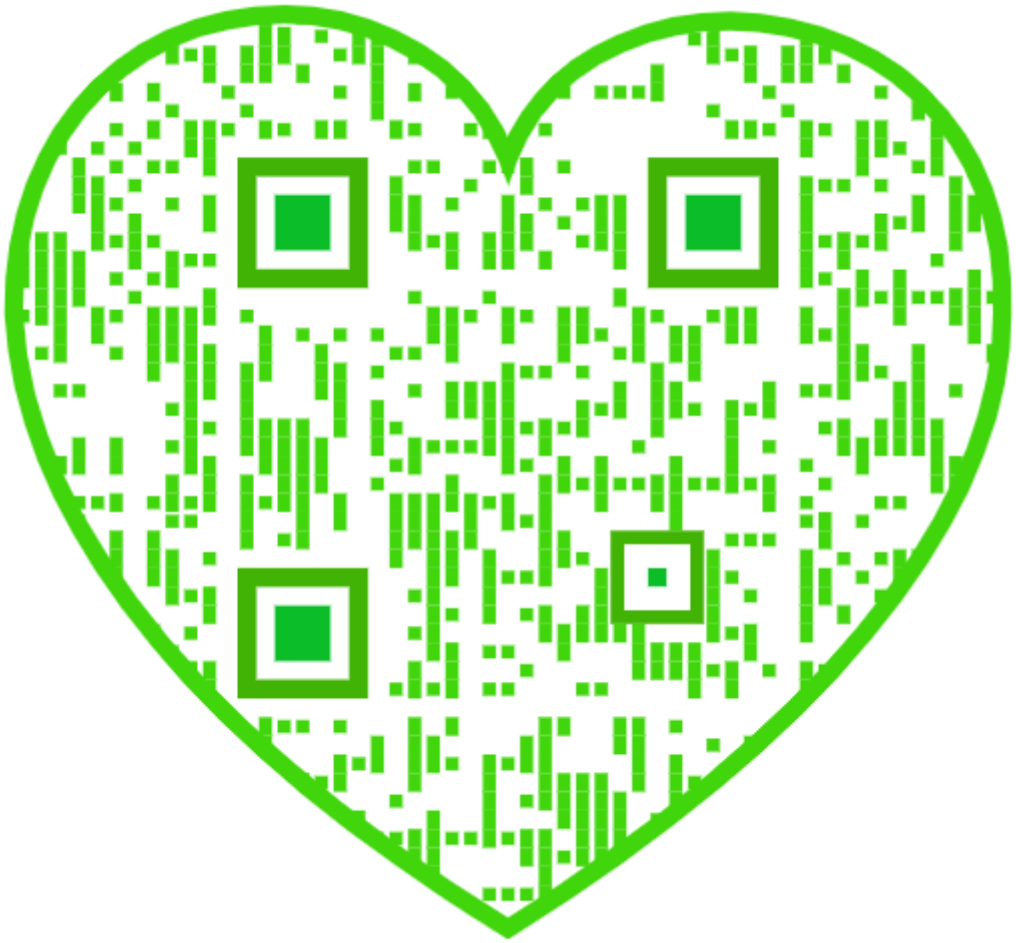

THE EDITOR'S ANGLE

Grandpa,

WE'RE READY WHENEVER YOU ARE

When Bob Oberholtzer, a *WOOD*® magazine subscriber from Old Bridge, New Jersey, sent in this photo of two of his seven grandchildren recently, I just couldn't resist sharing it with the rest of you. Are these two kids cute, or what?

It turns out that for the last year or so, Andrew, age 4, and his brother Christian, age 7, have shown more than a passing interest in Bob's workshop, especially Christian. He and Bob already have teamed up on a couple of projects—a tray to hold Christian's rock collection, and the strange and wonderful gizmo that you see the lad show off in the photograph *above*. Andrew plays the part of an interested bystander at this point, although he also fully enjoys his status as one of grandpa's helpers.

Sixty years old and a computer engineer by training, Bob has worked with wood most of his life. "The hobby was handed down in the family from uncles and cousins," he says. "It was born in me." And now, this proud grandpa feels grateful for the time he's able to spend with the young boys, sharing with them the joys and skills of his favorite hobby. While doing so, he makes sure to stress respect for his collection of woodworking power tools and of working safely at all times.

Will yet another generation of Oberholtzers keep the family's woodworking tradition alive? Who can say? But one thing is sure. These two boys will long remember the good times they had working and learning at grandpa's side. I bet Bob will, too.

Larry Clayton

SUBSCRIPTION SERVICE: For a change of address it is best for you to directly contact your local Postmaster who then will notify us. For any other service on your subscription, please write *WOOD* Customer Service, P.O. Box 55050, Boulder, CO 80322-5050 (enclose a recent label from your magazine for better service). Or you may phone toll-free 800-374-9663.
EDITORIAL MAILING ADDRESS: *WOOD* magazine, 1912 Grand Ave., Des Moines, IA 50309-3379. WE CARE!

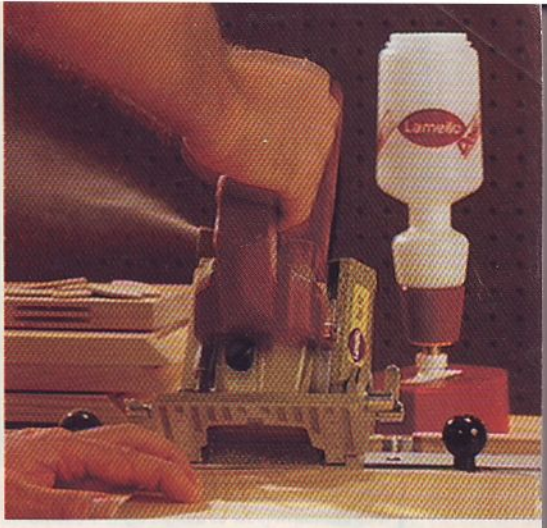

Get your hands on the Speed, Power and Accuracy of a Lamello

When you demand the highest performance and greatest precision from a power tool, reach for Lamello and experience Total Operational Performance.

Only Lamello, the inventor of plate joinery, features a complete woodworking system with joining machines and accessories to match every need and budget.

Only Lamello offers a full range of specialized plates for every type of construction from frame and carcass joints to furniture making and finish carpentry.

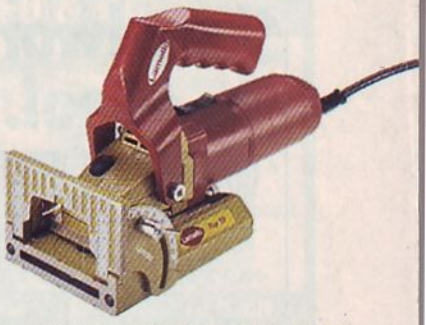

Discover Swiss quality and value. Invest in better woodworking with the Lamello system.

The Lamello Professional Plate Joining System
Lamello
Made in Switzerland - Imported by Colonial Saw

Call 1-800-252-6355 for your nearest Lamello Dealer

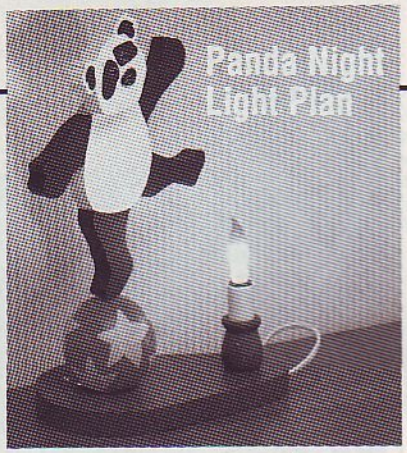

This Panda takes the "scare" out of dark nights with the warm glow of a night light. Patterns drawn **FULL SIZE** for easy transfer to your 3/4" stock. Approx. 12" high. Order hdw. parts below.
#W880 Panda Night Light Plan..... $3.99/EA

Hardware Parts

This package contains a candelabra socket, 6' cord, on/off switch, light bulb, candle tube, candle cup, wood ball, dowel, plastic eyes, & nose. Plan, wood, and paint **not included.**
#3321 Panda Hdw. Parts..... $8.99/PKG

HOW TO ORDER: List quantity, part number, item, price & total of order. Include $4.95 shipping & handling per order. MN residents add 6.5% sales tax. Mail check or money order. **Credit card customers call TOLL FREE 1-800-441-9870.**

MEISEL HARDWARE SPECIALTIES
P.O. BOX 70 W 12 MOUND, MN 55364

The Ultimate Woodworking Tool.

The Woodworkers' Store
New! 1992-1993 Catalog
Over 150 new, hard-to-find items!

Yes! Send me the next four issues of The Woodworkers' Store catalog for only $2/year.

Name

Address

City State Zip

The Woodworkers' Store®
Dept. 23117
21801 Industrial Blvd.
Rogers, MN 55374
Credit Card Orders
(612) 428-3200

Better Homes and Gardens.

WOOD®

THE WORLD'S LEADING WOODWORKING MAGAZINE

This issue's cover wood grain: aspen *Cover illustration: Jim Stevenson*

DECEMBER 1992 ISSUE NO. 57

CRAFTSMAN CLOSE-UP
Orchestrating maple 33
At 78 years young, Oklahoman Bill Rohde has produced over 130 high-quality violins from his one-man shop—enough to outfit the section needs of two or three orchestras.

CARVING
Kris Kringle goes cross-country 38
Shape this delightful holiday decoration with your trusty bench knife, and you'll find the remaining work a downhill ride all the way.

TOOL BUYMANSHIP 42
Improve the speed and precision of making wood joints with one of the 13 tools featured here.

SHOP-TESTED TECHNIQUES
Biscuit-joinery basics 48
Try some of these seven basic biscuit joints in your next woodworking project for sturdy construction in a jiffy.

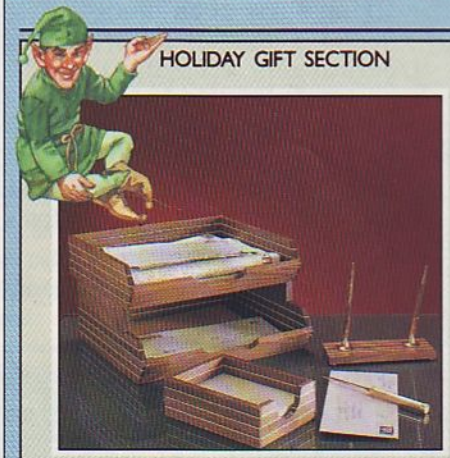

HOLIDAY GIFT SECTION

Top-drawer desk set 54
Dress up your desktop at work or home with these handsome in/out trays and notepaper and pen holders.

All aboard the WOOD® Express 60
Budding train engineers will jump for joy when they see this charming choochoo beneath the Christmas tree.

In-an-instant ornaments 66
Scrollsaw any or all of these 8 delightful decorations using the full-sized patterns inside.

Sneak-a-peek periscope 68
Now, kids *can* see Mommy kissing Santa Claus with this handy-dandy mirrored toy. It extends to let your little spies peer over sofas and around corners.

Classic shapes of Christmas 70
Deck the halls with one or more of these turned, hollow ornaments, or give them away as gifts to friends and loved ones.

Bookshelf classics 72
Build these Grecian-styled bookends and create the perfect home for such all-time favorites as *The Christmas Carol* and *The Miracle on 34th Street.*

Nature's medicine cabinet 74
In times past, early settlers didn't rely on local pharmacies to cure a sore throat or throbbing headache. They turned, instead, to the forest.

DEVELOP YOUR SHOP SKILLS
How to dodge router burns 76
Achieve crisp, clean router cuts with these practical pointers.

TURNING
From blank to finished bowl 77
Take our eight-step illustrated course on bowl-turning basics.

SHORT-SUBJECT FEATURES

Editor's Angle 1
Talking Back 8
Tips From Your Shop 14
Products That Perform . . . 26
Great Ideas For Your Shop . 30
Ask WOOD 82
Wood Anecdote 84
Yesterday's Tools 86
Finishing Touches 96

Put Your Entire Shop On Wheels
MOBILE MACHINE BASES

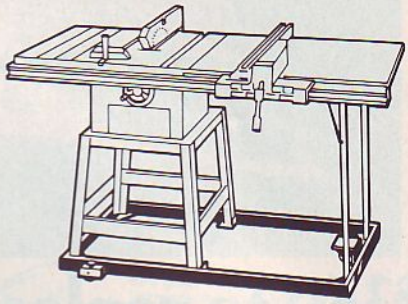

- Increase your working area
- Store machines when not in use
- Hundreds of models available
- Precision welded steel construction
- Three 2-1/2" wheels for stability
- Dual wheel locks provide positive positioning
- Lifetime warranty

Call for a free catalog

MADE IN USA

HTC Products, Inc.
120 E. Hudson • P.O.Box 839
Royal Oak, Michigan 48068-0839
(800) 624-2027

STAINED GLASS VIDEO & CATALOG

Improve the Looks and value of your home with:
- Entry doors & sidelights
- Kitchen cabinet inserts
- Tiffany lampshades

Save money and make it yourself - Delphi shows you how!

Make Your Own Custom Stained Glass...
The perfect way to get started in stained glass. Our 25-minute video covers all the basics: Scoring, breaking, foiling, and soldering. Filled with clear and simple instructions, hints, close-ups, and examples to help you craft your own stained glass windows, lamps, and more. VHS only.
#6149VW...$10.95 + $3.00 shipping/hand.

A $10.95 rebate is applied to your next order. If you don't wish to purchase, just return the video for a prompt refund, but keep the 80-page color catalog.

To Order - Call Toll Free: 1-800-248-2048

DELPHI STAINED GLASS
2116 E. Michigan Ave.
Lansing, MI 48912

CASCADE TOOLS, INC.

CLASSICS!

We offer a wide variety of classical bits. Set the standard for table, furniture and edge work. Give your work a custom look.

1/4" SHANK

PART	CUTTER DIA. A	CUTTING LENGTH B	OVERALL LENGTH C	CUTTING WIDTH W	PRICE
C1289	1-1/4"	5/8"	2-1/8"	3/8"	$25.00
C1290	1-1/2"	5/8"	2-1/4"	1/2"	$25.00

1/2" SHANK

PART	CUTTER DIA. A	CUTTING LENGTH B	OVERALL LENGTH C	CUTTING WIDTH W	PRICE
C1291	1-1/4"	5/8"	2-1/8"	3/8"	$25.00
C1292	1-1/2"	5/8"	2-1/4"	1/2"	$25.00

1/4" SHANK

PART	CUTTER DIA. A	CUTTING LENGTH B	OVERALL LENGTH C	CUTTING WIDTH W	PRICE
C1293	1-1/8"	1/2"	2-1/8"	5/16"	$25.00
C1294	1-3/8"	11/16"	2-1/4"	7/16"	$25.00

1/2" SHANK

PART	CUTTER DIA. A	CUTTING LENGTH B	OVERALL LENGTH C	CUTTING WIDTH W	PRICE
C1295	1-1/8"	1/2"	2-1/4"	5/16"	$25.00
C1296	1-3/8"	5/8"	2-1/2"	7/16"	$25.00

1/4" SHANK

PART	CUTTER DIA. A	CUTTING LENGTH B	OVERALL LENGTH C	CUTTING WIDTH W	PRICE
C1297	1-1/4"	5/8"	2-1/8"	3/8"	$25.00
C1298	1-3/8"	5/8"	2-1/8"	7/16"	$25.00

1/2" SHANK

PART	CUTTER DIA. A	CUTTING LENGTH B	OVERALL LENGTH C	CUTTING WIDTH W	PRICE
C1299	1-3/8"	1/2"	1-3/8"	7/16"	$25.00
C1300	1-5/8"	3/4"	2-1/2"	9/16"	$25.00

1/4" SHANK

PART	CUTTER DIA. A	CUTTING LENGTH B	OVERALL LENGTH C	CUTTING WIDTH W	PRICE
C1301	1-1/2"	3/4"	2-1/4"	1/2"	$25.00

1/2" SHANK

PART	CUTTER DIA. A	CUTTING LENGTH B	OVERALL LENGTH C	CUTTING WIDTH W	PRICE
C1302	1-5/8"	7/8"	2-3/4"	9/16"	$25.00

1/2" SHANK

PART	CUTTER DIA. A	CUTTING LENGTH B	OVERALL LENGTH C	BEAD DIA. b	PRICE
C1262	1-1/8"	7/8"	2-3/8"	1/4"	$20.00
C1263	1-3/8"	1"	2-1/2"	5/16"	$22.00
C1264	1-5/8"	1-1/4"	2-3/4"	3/8"	$24.00

EXCLUSIVE DISTRIBUTOR OF INDUSTRIAL CARBIDE TOOLING!

ASK FOR A FREE CATALOG!

FREE SHIPPING ON ORDERS TOTALING $100 OR MORE!

VISA **1-800-235-0272** MasterCard

ORDER 24 hrs. A DAY!

TALKING BACK

We welcome comments, criticisms, suggestions, and even compliments. Send your correspondence to: Talking Back, Better Homes and Gardens *WOOD*® magazine, 1912 Grand Ave., Des Moines, IA 50309-3379.

Punching tin made easier

I read your article on punched tin in the August 1992 issue with great interest. I have worked quite a bit with punched tin and was concerned about the time it takes using the hand method like the one you described. Plus, you waste a lot of plywood for a backing board in the process.

I have designed a system that works efficiently and produces a top-quality punched-tin panel in about 15 minutes. With it, a craftsman can make an identical hole time after time, with the help of a drill press.

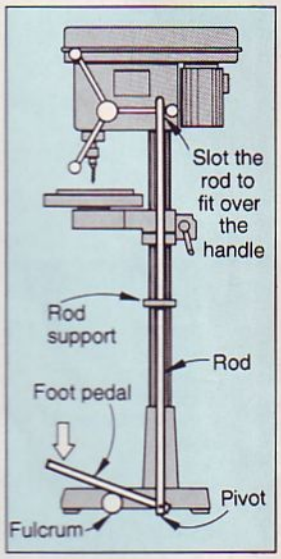

First, cut a piece of ¾" plywood about 2" larger in width and length than the finished tin panel. Next, from an old truck-tire sidewall, cut out a flat 4x4" square. Rout out a square in the plywood so that the hard rubber fits in it snugly. Clamp the plywood with its rubber insert to the drill-press table, centering the insert beneath the chuck.

Next, make a small chisel using a 16d nail. Flatten and shape the end, cut the head off, and chuck it in the drill press. Now to make this system really work effectively, you must connect the drill-press handles to a foot pedal, which you can construct yourself. (See illustration.) This attachment frees both hands for working the tin. When the pedal is depressed, it brings the chuck and chisel down, punching a hole through the tin. The hard rubber provides a backing for the chisel without leaving an impression to interfere with successive holes. Now, place a pattern on top of a tin blank under the chuck and chisel, and begin making your holes.

—Dick Wykoff, Hanover, Ind.

Mr. Tully would make a good teacher

After reading the logging article in your February 1992 issue, I've come to the conclusion that the problems our country now faces with the loggers, national forest, and environmentalists could be solved if Mr. Tulley's management practices were used nationwide. I wonder if he would like the job as instructor to our logging industry?

—David Wiggins, Hindsville, Ark.

Saw blade catalog is an excellent resource

Freud has just come out with a saw-blade catalog that we think will serve you well. Five pages of the 44-page catalog provide general information, saw-blade selection and conversion charts, and a glossary of saw-blade terminology. The rest of the publication breaks down into discussions of saw-blade types. You'll find a carbide hardness chart, application chart, and technical data that apply to each accompanying blade. If you'd like a copy, just write: 1992 Saw Blade Catalog, Freud, P.O. Box 7187, 218 Feld Ave., High Point, NC 27264.

—The WOOD® *magazine staff*

Tropical disturbance

I'm confused regarding your "Rain Forest Update" in the April 1992 issue. I certainly want to act in an environmentally responsible manner and have today requested the appropriate information from the Rainforest Alliance and WARP, as mentioned on *page 80*. However, on *page 85* there's an ad featuring padauk and ebony for sale, the woods you recommend not using. I would like to suggest that your advertising staff be advised of your editorial policy, or vice versa. You can't have it both ways.

—Carl Fox, West Columbia, S.C.

Another tropical disturbance

For shame! On *page 80* of the April 1992 issue you list six woods that are endangered and endorse the [Rainforest Alliance's] advice to substitute other woods. However, on *page 85* are two ads for exotic woods, one even listing two of the woods you say not to use! It seems to me you need a consistent editorial policy to either endorse substitution of endangered woods and refuse ads of companies selling these products, or accept all paid ads and pretend that the rain forest problem doesn't exist.

—Linda Bisbee, Englewood, Colo.

The editorial policy at WOOD *magazine regarding exotic woods was formulated with the writing of Issue 51, April 1992. The endangered species listed in the Rain Forest Update are now banned for use in all projects created for publication in the magazine. In other words, in our shop we won't use afrormosia, African mahogany, ebony, iroko, padauk, or rosewood.*

By warning our readers of the environmental concerns we have about these woods, we, in effect, voice our editorial stance. However, we make no claims that our advertisers will sell only products that are environmentally sound. Thanks, Carl and Linda, for raising this important issue.

Continued on page 10

STEVE WALL LUMBER CO.

Quality Hardwoods and Woodworking machinery For The Craftsman and Educational Institutions

Ash	4/4	Select	1.90
Basswood	4/4	Select	1.35
Birch	4/4	Select	1.60
Cherry	4/4	Select	2.45
Cypress	4/4	Select	1.65
Hickory	4/4	Select	1.50
Mahogany (Genuine)	4/4	Select	2.75
Maple (Hard)	4/4	Select	1.75
Maple (Soft)	4/4	Select	1.40
Pecan	4/4	Select	1.50
Poplar	4/4	Select	1.20
White OR Red Oak	4/4	Select	1.90
Walnut	4/4	Select	2.75
Cedar (Aromatic Red)	4/4	1C+Btr.	1.40
White Pine	4/4	F.G.	.95
Yellow Pine	4/4	Clear	1.20

Above prices are for 100' quantities of kilndried rough lumber sold by the Bd. Ft. FOB Mayodan, NC.
Call for quantity discounts. Other sizes and grades available.

UPS Specials

	$ 61.00
	$ 49.00
	$ 55.00
	$ 70.00
	$ 51.00
	$ 49.00
	$ 75.00
	$ 54.00
	$ 48.00
	$ 49.00
	$ 47.00
	$ 59.00
	$ 73.00
	$ 48.00
	$ 39.00
	$ 47.00

Above prices are 20 bd. ft. bundles of clear kilndried lumber 3"-10" wide • 3'-7' long (Random widths & lengths) Surfaced 2 sides or rough. Delivered UPS prepaid in the Continental U.S.

LUMBER SPECIALS

MAHOGANY 100 Bd. Ft. Bundle #1 Common S2S 13/16 $ 175*
WALNUT 100 Bd. Ft. Bundle #1 Common 4/4 $ 110*
*FOB Mayodan - Motor Freight Only

EXOTICS: Bloodwood $7.00 • Canary Wood $8.50
Rosewood $9.50 • Tulip Wood $11.00
Others Available

STEVE H. WALL LUMBER CO.
BOX 287 • MAYODAN, N.C. 27027
919-427-0637 • 1-800-633-4062 • FAX 919-427-7588

Send $1.00 For Lumber and Machinery Catalog

ROBLAND X 31
THE INTELLIGENT ONE MAN SHOP

90-MINUTE DEMO VIDEO

- 1100 lbs.
- 3 separate 3HP motors
- 12" jointer
- 12" planer
- 10" table saw
- 50" sliding table
- 3HP shaper
- mortiser
- cast iron

The Robland X 31
is designed to make maximum use of minimum space ideal for the small professional shop and the demanding hobbyist. Change from one tool to another in 20 seconds or less! Solid, sturdy, reliable.

CALL OR WRITE FOR MORE INFORMATION NOW!

2081 LAGUNA CANYON RD., LAGUNA BEACH, CA 92651

LAGUNA TOOLS

1-800-234-1976 or 714-494-7006

Econ-Abrasives

WE MAKE ABRASIVE BELTS ANY SIZE, ANY GRIT!

Standard Abrasive Sheets

CABINET PAPER

	50/pk	100/pk
60D	$15.00	$27.00C
80D	14.00	25.00C
100 thru 150C	13.00	23.00C

FINISHING PAPER

80A	$ 10.00	$17.00C
100 thru 280A	9.00	15.00C

NO LOAD PAPER(white)

100 thru 400A	$11.00	$19.00C

"C" = 100 SHEETS

Velcro® Vacuum Discs
8 Hole pattern for Bosch sanders

Dia.	Grit	Price
5"	60	$ .48ea
5"	80	.46
5"	100 thru 320	.45

** OTHER PRODUCTS **

*Wide Belts*Rolls*Flap Wheels
*Pump Sleeves*PSA Discs
*Router & Wood Bits*Wood Glue

ABRASIVE BELTS

Please Specify Grits

1X30	$ .73 ea	3X24	$ .84 ea
1X42	.73 ea	3X27	.87 ea
1X44	.73 ea	4X21 3/4	.96 ea
2 1/2X16	.77 ea	4X24	.99 ea
3X18	.78 ea	4X36	1.20 ea
3X21	.81 ea	6X48	3.14 ea
3X23 3/4	.84 ea	2 1/4X80	2.94 ea

OTHER SIZES ON REQUEST

HEAVY DUTY SPRING CLAMPS

Clamps come w/PVC tips and grips.

Size	Price
4"	$1.75 ea
6"	2.25
8"	3.50

JUMBO ROUTER PAD(24" x 36")

It will not allow small blocks of wood to slip out under router or sanding applications. ROUTER PAD ONLY $8.95ea.

JUMBO BELT CLEANING STICK ONLY $8.80

*MasterCard, VISA, C.O.D. or Check
*SATISFACTION GUARANTEED!!!
*CALL FOR *FREE* CATALOG
- TX & NV add appropriate sales tax
- Continental U. S. shipping add $5.50

Econ-Abrasives
P. O. Box B865021
Plano, TX 75086
(214)377-9779

TOLL-FREE ORDERING LINE (800) 367-4101

TRANSPOWER

SINCE 1953

FOR ORDERS & CATALOGUE CALL
1-800-654-7702 ext. 24

SUPER HEAVY DUTY WOODWORKING EQUIPMENT

500	1" Shaper Router, 3HP	$698	150 12" Auto Planer, 2HP	$328
50A	1" Shaper Router, 3HP	$765	650 15" Auto Planer, 2HP	$695
86A	1¼" Shaper Router, 3HP	$890	800 16" Auto Planer, 3HP	$765
860	Tilting Spindle Shaper	$1285	20A 20" Auto Planer, 3HP	$1195

Dust Collector 1HP Motor	$175
Dust Collector 1½HP Motor	$245
Dust Collector 2HP Motor	$285
Dust Collector 3HP Motor	$450

PROFESSIONAL SHOP EQUIPMENT

SB500	14" Band Saw 2 Speeds 1HP Motor	$230
SB600	16" Band Saw 3 Speeds 1½HP Motor	$490
SB700	18" Band Saw 3 Speeds 2HP Motor	$595
SB800	20" Band Saw 3 Speeds 3HP Motor	$1280
JT650A	6" Long Bed Jointer 1HP Motor	$275
JT860	8" Long Bed Jointer 2HP Motor	$640
HP500S	3HP Shaper With Sliding Table	$940
HD1500	Industrial Wood Lathe, Cast Iron Bed	$590
SD1200	120" Edge Belt Sander 2HP Motor	$940
SD800	80" Edge Belt Sander (Stand Optional)	$395
DS2500	25" Double Drum Sander 5HP Motor	$2650
VH120	Industrial 12" Disc Sander 48" Belt	$450
RF150	Auto Feeder 3 Wheels ¼HP Motor	$360
RF180	Auto Feeder 3 Wheels ½HP Motor	$420
RF350	Auto Feeder 3 Wheels 1HP Motor	$650
DB600	Air Drum/Brush Sander 3 Speeds	$195

★ HTC Mobile Bases ★ USA Motors Available

250	H.D. 10" Table Saw 1½HP Motor $340
250	Equipped With BIESEMEYER 82" Fence $575
20A	H.D. 10" Cabinet Saw 3HP Motor $745
200	H.D. 10" Cabinet Saw 3HP Motor $960

TCM Industries, Inc. 325 Paseo Sonrisa. Dept. 24. Walnut. CA 91789
In California (714) 594-7099. Ext. 24

TALKING BACK

Continued from page 9

Wooden pens write his ticket to Japan

Soon after your August 1991 issue arrived, I received a call from a friend asking if I would accompany a 20-member team from his congregation to Japan to build a church. To raise the money for the trip, I made 70 pen sets like those featured in that issue before leaving for Japan in January. The proceeds paid for half of my trip. Two weeks later I returned home, leaving a successful project and some gracious, appreciative Japanese people behind. Your fine magazine has provided me with an excellent library and many great projects, but none as rewarding as the wooden pens.

—William Sampson, Virginia Beach, Va.

This magazine tops his list

Being a charter subscriber to *WOOD®* magazine, I feel that I can give an honest evaluation of your publication. Presently, I subscribe to the following publications: *Fine Woodworking, American Woodworker, Workbench, Handyman, Woodworker's Journal, Woodsmith, Workshop News, Weekend Woodworking, Home Mechanix,* and *Popular Mechanics.* Many of these are fine magazines, but I look forward to *WOOD* magazine the most! You tailor your magazine to the amateur woodworker better than any other. The quality of your photos, articles, and plans is second to none. I especially appreciate your tool evaluations—one of the most important subjects for woodworkers like me. I find magazines fail to "tell it like it is." *WOOD* is an exception. I truly appreciate your honest recommendations. Keep up the good work.

—Roger Rynberg, Muskegon, Mich.

How we finished our Queen Anne table

I found the Queen Anne coffee table project in the January 1992 issue very interesting and filled with many new insights and ideas. Just one question, though: How was the table finished? Specifically, what stain and topcoat?

—Mike Self, Eaton, Colo.

Mike, Jim Boelling, our resident project builder, first applied Bartley Walnut Filler (which is also a stain) to the piece and allowed that to dry. Then he sprayed on four coats of Deft, a clear lacquer finish. After the final coat, Jim rubbed out the finish with pumice rubbing compound and a soft cloth.

Reader has a leg up on us

Your article on how to take the wobble out of furniture with four legs, August 1992, was fine as far as it went. But, I believe it should have included all the possible wobble problems: (1) three legs the same length and one leg short, (2) two legs on one side the same length and the other two short, (3) three short legs and one long, and (4) each of the four legs at different lengths.

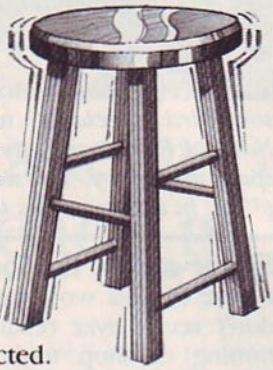

For a better solution, measure all four legs to determine the shortest one. Then, make a simple measuring device out of a thin, yardstick-like scrap of wood. Cut the stick off on the ends at the same angle and length as the shortest leg. Use this to mark the two outside surfaces of the three longer legs. Then, cut as you instructed.

James O'Flaherty, Geneva, Ill.

Thanks, Jim, for a very practical solution. Hopefully, a few readers will try it out.

Continued on page 12

NEW! SKIL BENCHTOP TOOLS

10" TABLE SAW MODEL 3400
- 13 AMP MOTOR
- DIE CAST ALUMINUM MITER GAUGE, EXCLUSIVE SELF ALIGNING QUICK-SET RIP FENCE
- LARGE 17 5/8" X 26 5/8" ALUMINUM TABLE
- DUST COLLECTION CAPABLE

2 YR. WARRANTY

OUR PRICE $179.00

16" SCROLL SAW MODEL 3330
- 1.75 AMP MOTOR
- DIE CAST ALUMINUM TABLE TILTS 45 DEGREE
- AIR BLOWER KEEPS CUTTING LINE DUST FREE AT ALL TIMES!
- BLADE STORAGE COMPARTMENT

2 YR. WARRANTY

OUR PRICE $135.00

HOLIDAY SPECIAL
RECEIVE A FREE SKIL #2210 SUPERTWIST WITH EVERY BENCHTOP TOOL PURCHASED!

4" BELT/6" DISC SANDER MODEL 3370
- 1/3 HP MOTOR
- INCLUDES MITER GAUGE
- DIECAST ALUMINUM TABLE CAN BE ADJUSTED DOWNWARD 0-45 DEGREE
- DUST COLLECTION

2 YR. WARRANTY

OUR PRICE $135.00

8" DRILL PRESS MODEL 3380
- 1/4 HP INDUCTION MOTOR, 1720 RPM
- 5 OPERATING SPEEDS
- 1/2" CAPACITY CHUCK WITH 2" SPINDLE TRAVEL
- RUGGED CAST IRON TABLE TILTS 45 DEG FOR ANGLE DRILLING

2 YR. WARRANTY

OUR PRICE $135.00

SAVE ON THESE ADDITIONAL SKIL STOCKING STUFFERS!

1605-02	BISCUIT JOINTER W/CS	$118	1812	LMNT TRMMR, 2.8 AMP, CRB BIT	$69
1605-02K	BISCUIT JOINTER W/CS, 200 BISC	125	1870	2 1/4 HP PLUNGE ROUTER	159
2736-04	12V CRDLS VSR KYLS W/2 BAT, CS	133	1875	2 1/4 HP EVS PLUNGE ROUTER	174
77	7 1/4" WORM DRIVE CIRC SAW	145	5860	8 1/4" WORM DRIVE CIRC SAW	168
1575	3 3/4" PLANER WITH CASE	119	7484	5" RNDM ORB SANDER, DSTLS	99

INTERNATIONAL TOOL CORPORATION
1939 TYLER STREET, HOLLYWOOD, FL 33020
COD ADD $5.00 (CASH, CASHIERS CHECK OR MONEY ORDER PLEASE)
1-800-338-3384
IN USA, CANADA, PUERTO RICO & US VIRGIN ISLANDS!
FREE FREIGHT & SAME DAY SHIPPING ON MOST ORDERS OVER $25.00 MINIMUM PURCHASE
QUANTITIES LIMITED- NOT RESPONSIBLE FOR TYPOGRAPHICAL ERRORS
FAX US YOUR ORDER AT 1-305-927-0291

PORTER-CABLE

100	7/8 HP ROUTER	$95
314	4 1/2" TRIM SAW	135
345	SAW BOSS 6" CIRCULAR SAW	101
330	SPEED BLOCK FIN SNDR W/DISPENSER	56
332	QUICKSAND 5" R.O. DSTLS, STIKIT PAD	CALL
333	QUICKSAND 5" R.O. DSTLS, VELCRO PAD	CALL
334	QUIKSAND 5" R.O. W/STIKIT, DUSTLESS	CALL
351	3" x 21" BELT SANDER	139
352	3" x 24" BELT SANDER WITH DUST BAG	139
352VS	SAME AS 352 W/VAR. SP OF 850 TO 1300	162
360	3" x 24" BELT SANDER WITH DUST BAG	176
361	3" x 24" BELT SANDER	169
362	4" x 24" BELT SANDER WITH DUST BAG	188
363	4" x 24" BELT SANDER	183
505	1/2 SHT FINISHING SANDER W/FREE DISPNR	115
548	BAYONET SAW WORM DRIVE	192
555	BISCUIT JOINER WITH STEEL CASE	164
617	7 1/4" BUILDERS SAW	118
690	1 1/2 HP ROUTER W/1/4" & 1/2" COLLETS	125
691	1 1/2 HP "D" HANDLE ROUTER	140
693	1 1/2 HP PLUNGE BASE ROUTER	164
695	SHAPER TABLE W/ 1 1/2 HP ROUTER	199
5008	DOVETAIL TEMPLATE	75
5009	MORTISE & TENON JIG	44
5116	OMNI JIG	255
550	NEW POCKET CUTTER 5 AMP	CALL
555K	BISCUIT JOINER W/1000 BISCUITS	188
6931	PLUNGE ROUTER BASE	73
7116	NEW 24" OMNIJIG DOVETAIL MACHINE	299
7310	LAMINATE TRIMMER, 5.6 AMP	84
7335	5" VAR. SP R.O.S. W/STIKIT PAD & DUST EXT	124
7336	6" VAR. SP R.O.S. W/STIKIT PAD & DUST EXT	128
7518	3 1/4 HP FIXED BASE ROUTER - 5 SPEED	259
7519	3 1/4 HP FIXED BASE ROUTER - SINGLE SP	224
7538	3 1/4 HP PLUNGE ROUTER - SINGLE SP	224
7539	3 1/4 HP PLUNGE ROUTER - 5 SPEED	259
7549	TOP HANDLE BAYONET SAW	143
7700	NEW! LASERLOC LINE OF CUT MITER SAW	349
9118	PORTA PLANE KIT W/CASE, CARB. BLADE	199
9314	4 1/2" TRIM SAW KIT	148
9315	7 1/4" BUILDERS SAW KIT	137
9345	SAW BOSS 6" CIRCULAR SAW KIT	122
9367	3 1/4" PLANE KIT	152
9548	WORM GEAR BAYONET SAW KIT	201
9617	7 1/4" BUILDERS SAW KIT	136
9637	TIGER SAW VAR SPEED RECIP. SAW KIT	138
73505	TIGER CUT RECIP. SAW KIT	35
97310	LAMINATE TRIMMER KIT W/4 BASES & CASE	187

FAX US YOUR ORDER AT 1-305-927-0291
INTERNATIONAL TOOL CORPORATION
1939 TYLER STREET, HOLLYWOOD, FL 33020
COD ADD $5.00 (CASH, CASHIERS CHECK OR MONEY ORDER PLEASE)
1-800-338-3384
FREE FREIGHT & SAME DAY SHIPPING ON MOST ORDERS WITH $25.00 MINIMUM PURCHASE

"Jorgensen"

ITEM	JAW LENGTH	OPEN CAP	OUR PRICE EACH	BOX OF 6
STYLE 37 2 1/2" THROAT 1/4" x 3/4"				
3706	6"		6.20	34.50
3712	12"		6.70	37.50
3718	18"		7.20	40.50
3724	24"		8.20	43.50
3730	30"		9.10	49.50
3736	36"		10.20	55.50

RECEIVE A $25.00 CASH REBATE WITH EVERY PURCHASE OF $500 OR MORE.
OFFER GOOD THRU 12/31/92 . . . CALL FOR DETAILS

Panasonic

EY6205BC	12V, 3/8" CK, KYLS 2 SPD VSR W/15 MIN CHRG	$177
EY571BC	9.6V, 3/8" CK,KYLS, VSR W/2 BAT, CHGR, CSE	149

DELTA

22-540	12" PORTABLE PLANER	$398
31-460	4" BELT/6" DISC SANDER	129
40-560	16" TWO SPEED SCROLL SAW	183
31-080	1" BELT/5" DISC SANDER	93
33-060	NEW SIDEKICK 6 1/2" FRAME & TRIM SAW	369
50-075	DUST COLLECTOR/SWEEPER, 3/4 HP	249

HITACHI

C8FB	8 1/2" SLIDE COMPOUND MITER SAW	438
C12FA	12" DELUXE MITER SAW	305
TR12	3 HP PLUNGE ROUTER	167

Milwaukee

6365	7 1/4" CIRCULAR SAW	120
6511	2 SPD SAWZALL WITH CASE & BLADES	129
6527	SUPER SAWZALL WITH CASE & BLADES	164

freud — BUY 3 BLADES (LU85M010, LU84M010, LM72M010) FOR $129.00 AND GET A FREE 1 YEAR SUBSCRIPTION TO WOOD MAGAZINE!

WC110	10 PC WOOD CHISEL SET W/CASE	83
JS100	BISCUIT JOINER W/FREE GLUING SYSTEM	164
FT2000E	3 1/4 HP PLUNGE ROUTER, VAR SPEED	205
LU84M011	10" X 50T ATB COMBO WOOD BLADE	38
LU85M010	10" X 80T ATB CUT OFF - BEST FOR WOOD	55
LM72M010	10" X 24T FLAT TOP RIP BLADE - WOOD	36
LU87M010	10" X 24T RIP BLADE THIN KERF	37
LU88M010	10" X 60T CROSSCUT THIN KERF	43
LU89M010	10" X 72T TCH NON FERROUS METALS	64
LU92M010	10" X 80T TCH BEST FOR LAMINATES	67
LU96M010	10" X 80T TCH WOOD OR LAMINATES	67
TK206	10" X 24T THIN KERF RIPPING	25
TK406	10" X 60T THIN KERF FINE CUT OFF	34
TK906	10" X 50T THIN KERF CROSSCUT/COMBO	27
SD308	8" DADO SET WITH CARRYING CASE	116
EB100	EDGE BANDING SYSTEM	216
WC104	4 PC WOOD CHISEL SET W/CASE	39

senco

SN4	6-16 PENNY FRAMING NAILER	467
SN325	6-12 PENNY NAILER	398
SFN1-2	FINISH NAILER, 1 - 2" CAPACITY	258
SFN2B	FINISH NAILER, 1 1/2" - 2 1/2" CAPACITY	378
SKS	STAPLER, 5/8" - 1 1/2" CAPACITY	248
LS5	PINNER, 1" - 1 1/2" CAPACITY	257
LS2	PINNER, 5/8" TO 1" CAPACITY	247

BOSCH

1370DEVS	6" DSTLS VS RANDOM ORBIT SANDER	224
1581VS	TOP HANDLE JIG SAW, ORBITAL, VAR SPD	139
1582VSC	BARREL HANDLE CLIC JIG SAW ORB, VS	139
1608	TRIM ROUTER	84
1609K	INSTALLERS KIT W/3 BASES & CASE	174
1613	1 3/4 HP PLUNGE ROUTER	163
1613EVS	2 HP PLUNGE ROUTER, VAR SPEED	183
1614	1 HP PLUNGE ROUTER	127
1614EVS	1 1/4 HP PLUNGE ROUTER, VAR SPEED	148
3050VSRK	CORDLESS DRILL 9.6V, VS, 2 BAT & CASE	134
3283DVS	5" RANDOM ORBIT SANDER, VS, DUSTLESS	98

BOSTITCH

N80S	STICK NAILER - 6 TO 16 PENNY	$388
N80C	FRAMING COIL NAILER - 4D TO 13D CAP	399
N12B	ROOFING NAILER	417
N60FN	FINISH NAILER - 1 1/4" TO 2 1/2" CAPACITY	335
T28-5	FINISHING STAPLER - 1 3/16" CAPACITY	264
T31-3	FINISHING STAPLER - 1" CAPACITY	159

TALKING BACK

Continued from page 11

A cookie-mold catch

Just a quick note on the cookie molds [featured in the January 1992 issue of *WOOD*® magazine]. I think they're great, but I find the dimensions confusing. You show that each pattern is only 1¼" long when they're actually 4¼".

—Don Marston, Delaware, Ohio

Don, the confusion arises from the layout for the dimensions on that drawing. We put them where they didn't make sense. The 1¼" dimension refers to the distance between the two patterns. The revised drawing below *should clear things up.*

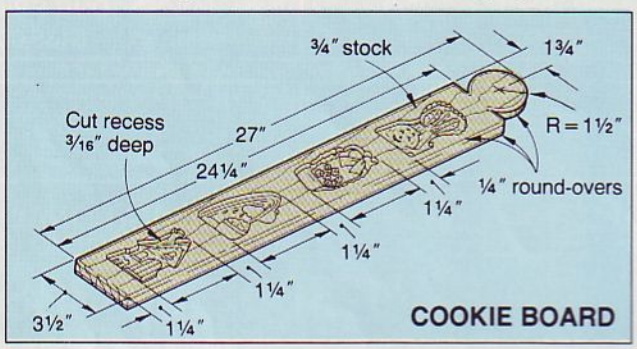

Reader finds Handi-Clamps

In your June 1992 issue you asked if anyone knew where to find those little flexible clamps that are so handy in furniture repairing. I'm happy to report that you can still buy them through Minuteman Furniture Restoration Systems, Inc. They are called Handi-Clamps and sell in packages of ten for $30.95, plus shipping and handling. The price drops to $29.95 when you order two to four sets. To place your telephone order, contact Minuteman at 800/733-1776.

—Kenny Bahmer, Hopkins, Minn.

Wants a houseful of Shaker furniture

I'm glad to hear about your "Furniture by the Roomful" plans (January 1992 issue). But, don't stop there. I'd like to see a *houseful* of beautiful, simple, and practical Shaker furniture.

—John Zettle, Buffalo, N.Y.

Good news, John (and all you other Shaker fans). We have big plans for Shaker furniture once we see how readers respond to our Queen Anne furniture offer. And while we wait, we'll continue to produce an occasional Shaker project for your building enjoyment. In the October 1992 issue, we featured a Shaker dresser. This follows a long list of other Shaker projects that have appeared in previous issues. These include a trestle table (issue 28), a ladder-back chair (issue 30), a wall cabinet (issue 41), and a buffet (issue 45).

Too much hole for a wren

The birdhouse for wrens on *pages 76-77* in the February 1992 issue is a nice piece of work. In fact, I plan to build one. But, I have one big complaint to make about the hole size. It's too big. Your plans show a hole size of 1⅛", which will make a first-class house for sparrows. You only need a ⅞" hole for a wren house.

—M.K. Caudell, Burlington, Kan.

You're right, M.K. According to Pat Schlarbaum, song-bird specialist with Iowa's Department of Natural Resources, anything over an inch will allow sparrows entry. He suggests using a 25-cent piece (15/16" in diameter) as the guideline for wrens.

Finger-saving tip for shop layout

I have been a woodworker for over 30 years and I don't recall ever reading anything about the positioning of shop tools for safety. I'm not talking about location, but about positioning all stationary power tools so that the operator is facing the entrance to the shop while he's running them. That way, if people enter the shop, the operator will notice them in a casual way, rather than having a sudden surprise and risking the loss of a finger or hand. I was taught this in the late 1950s during my high school shop days, and believe me, it has definitely saved some potentially terrible accidents.

—William Tosh, Rusk, Texas

Learning about safety the hard way

I am sitting here with my left hand in a cast—minus one index finger and a sewn up middle finger. [My accident occurred when] I was using a cabinet door-edge cutter on a tablesaw to make a sample piece of molding. I returned to the garage after my medical treatment and picked up the piece of wood that caused all the trouble. That scrap of wood measured ¾×¾×12"— way too short and narrow. When using the cabinet-door edge cutter, the workpiece should be positioned at a right angle to the tablesaw. This cuts both inside and outside edges of the door and removes almost all the flat support face from the workpiece. As I finished the cut, there was only a thin edge against the tablesaw, and I had very little to hold onto. The cutter blades grabbed the end of the scrap and pulled it into the blades, along with my finger and hand. My finger was mangled so badly, they couldn't save it. Luckily, I'm right-handed. Please remind your readers to use large scraps for sample cuts and always think about what that cutter is doing to a piece of wood so that they may bypass this pain.

—David Smith, Clinton, Ind.

EARN CASH, PRIZES FOR YOUR TOP SHOP TIP

Do you have a great shop tip (or two) you'd like to share with other *WOOD*® magazine readers? For each published submission, you will get at least $40 from *WOOD* magazine (as much as $200 if we devote a page or more of space elsewhere in the magazine to your idea). You also may earn a woodworking tool for submitting the Top Shop Tip for the issue.

We try not to use shop tips that have appeared in other magazines, so please send yours to only one. *We do not return shop tips.* Mail your tip(s), address, and daytime phone number to:

Top Shop Tip
WOOD magazine
1912 Grand Ave.
Des Moines, IA 50309-3379

Set up a router to zip round-overs on dowels

Sanding round-overs on several dowel ends can be a trying task, especially when you want the round-overs to match.

TIP: Do the job with your table-mounted router. With a piloted round-over bit of appropriate radius in the router, set the depth as you would for rounding-over any edge. Then, clamp a fence to the table with the distance to the center of the bit equal to ½ the dowel's diameter, as shown *below.* Turn on the router, and then slide the dowel along the fence into the bit. Rotate the dowel to form a perfect round-over.

–From the* WOOD *magazine shop

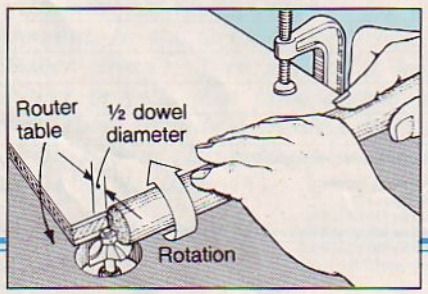

Shop-made tools end inside-cutting grief

The blade holders on some scrollsaws make every inside cut a nightmare. It's easy enough to thread the blade through a starting hole. But fitting it into the upper blade holder, and then trying to hold everything in position while you tighten the clamp screw can make you wish you'd taken up knitting instead.

TIP: You won't shy away from inside cuts after you make the shop aids shown *below.* (The ones in the drawing fit an AMT 4601 scrollsaw, but you can adapt them to other machines with similar blade holders.) Cut the parts from ¾" maple. Cut out block (A), working by trial and error to achieve a tight fit around the upper blade holder. Next, cut out the handle (B). Glue A to it, and clamp. Then, cut out the lower blade holder support (C).

To use, loosen the tension on the saw blade, and then insert the upper tool. Loosen the clamp screw, and remove the blade from the upper holder (leaving the lower blade holder attached).

Feed the blade through the start hole from the bottom, insert the end into the upper holder, and then install the lower blade holder support. Tighten the upper holder clamp screw, steadying the blade holder with the upper tool.

–Kenneth Fletcher, Alexandria, Va.

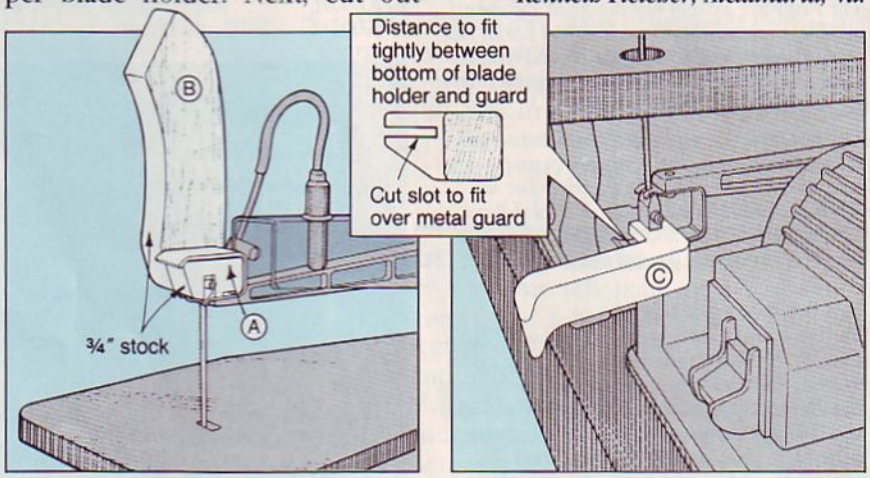

TOP SHOP TIP

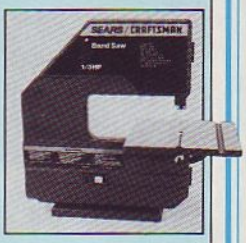

For his tip, Ken receives a Sears Craftsman 10" benchtop bandsaw, model no. 24450, *right.*

Cardboard protects fingers from blade

You're uncomfortable when your fingers come close to the blade while scrollsawing small parts.

TIP: Give yourself an extra margin of safety with a piece of cardboard (the back of a legal pad or the side of a cereal box will do the trick). Mount the workpiece securely at the center of the cardboard with double-faced tape or spots of hotmelt glue. Then, with the saw's holddown arm in place to keep the work against the table, guide your cut with your hands on the cardboard, a safe distance from the blade.

–Alex Polakowski, Skokie, Ill.

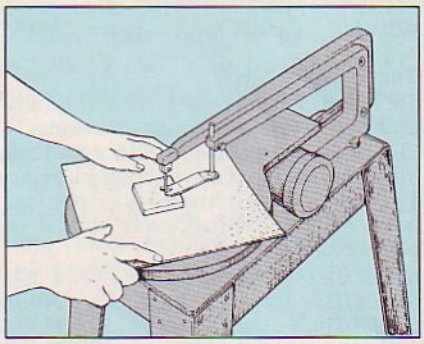

Continued on page 16

HARDWOODS

EXOTIC & DOMESTIC OVER 75 SPECIES

LUMBER • PLYWOOD • VENEERS
TURNING SQUARES & BLANKS

COLLECTORS SAMPLE KIT
30 EXOTIC & DOMESTIC WOODS
1/2" X 3" X 6" SANDED FINISH
$29.00 PLUS $5.00 S&H
Ideal for Collectors • Schools • Craftsmen • Cabinet & Furniture Makers • Architects • Designers

PURPLE HEART Deep true purple
PAU MARFIN White to pale yellow
BRAZILIAN CHERRY Salmon red to orange brown
Your Choice, ONLY **$3.99**/bd ft
20 BD FT MINIMUM, MIX OR MATCH, 3"–10" WIDE, 3'–7' LONG 4/4 ROUGH THICKNESS, SURFACED 2 SIDES
FOB PHOENIX

VENEER
BIRCH • CHERRY • WHITE OAK • MAPLE • PECAN
PINE • RED OAK • ASH • WALNUT • MAHOGANY
$12.00 PLUS $5.00 S&H
Perfect for Repairs, Marquetry, Inlay, or Small Projects
EACH PACK CONTAINS 5 PCS 5" X 36"

WE SHIP WORLDWIDE
T.M. **1-800-423-2450**
WOODWORKERS *Source*
5402 S. 40th Street • Phoenix, AZ 85040
602-437-4415

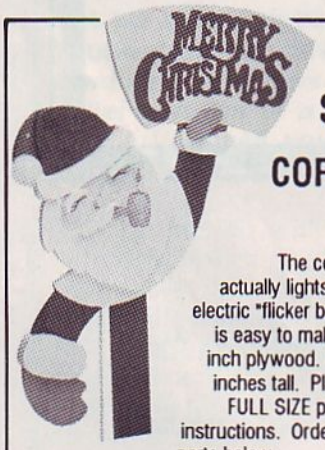

SANTA WITH CORNCOB PIPE

The corncob pipe actually lights up with an electric "flicker bulb". Santa is easy to make from 1/2 inch plywood. Body is 15 inches tall. Plan includes FULL SIZE patterns and instructions. Order hardware parts below.

#W754 Santa Plan $6.99/EA

Santa Hardware Parts

This package contains the corncob pipe bowl and stem, lamp socket, 6-foot cord with on/off switch, plug, flicker bulb, precut Merry Christmas banner, and a white pom pom. Project plan, paint and remaining plywood are not included.

#9950 Santa Hardware Parts..... $9.99/PKG
5 or more PKGS..... $9.29/PKG

HOW TO ORDER: List quantity, part number, item, price & total of order. Include $4.95 shipping & handling per order. MN residents add 6.5% sales tax. Mail check or money order. **Credit card customers call TOLL FREE 1-800-441-9870.**

MEISEL HARDWARE SPECIALTIES
P.O. BOX 70 W12 X MOUND, MN 55364

TIPS FROM YOUR SHOP (AND OURS)

Continued from page 14

Lugging lumber home is easier with pipe racks

It's downright dangerous to drive around with boards sticking out through the windows or bouncing around inside your car on the way home from the lumberyard. Hauling lumber inside puts a lot of wear and tear on your car's upholstery, too. Carrying longer lengths gets trickier yet, even if you have a pickup.

TIP: Solder short lengths of ¾" rigid copper plumbing pipe together with 90° elbows, tee fittings, and caps to make a pair of handy, portable yokes like those shown *below* for your car or truck. With measurements from your vehicle, size the yokes so the load sits level just below the windowsills and rear-view mirror on the passenger side. Keep the pipes short for maximum rigidity.

Wrap the hooks that hang over the door or fender with plastic tape or foam pipe insulation to protect the car's paint and interior. Put crutch tips or scrapwood with padding on the ends that rest against the car body. (Make the ends broad enough to prevent denting the car when the carriers are loaded.) Don't overload the yokes. Tie the load securely to both yokes, and avoid quick starts and stops when carrying lumber.

—Paul Matulewicz, Blackwood, N.J.

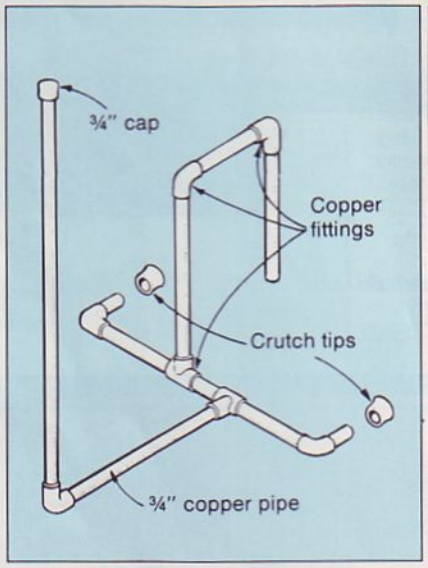

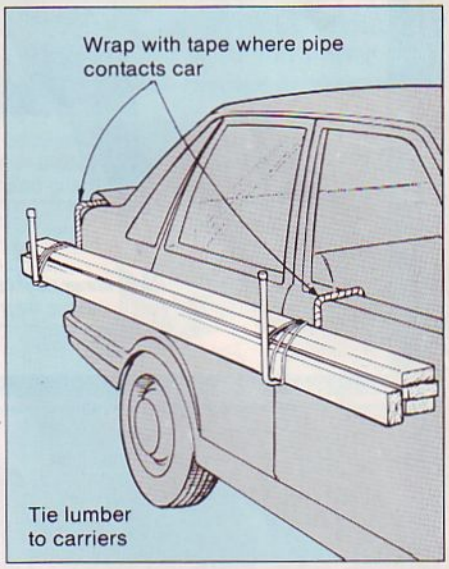

Piece of pipe makes button sanding a cinch

Wooden buttons often need to be sanded before use. But it's sure tempting to stick them into place without sanding because they're so hard to hang on to.

TIP: Push the stem of the button into the end of a piece of copper or plastic pipe about 12" long to give yourself a better grip. Try different sizes of pipe and tubing for various buttons.

—Mark Good, Orinda, Calif.

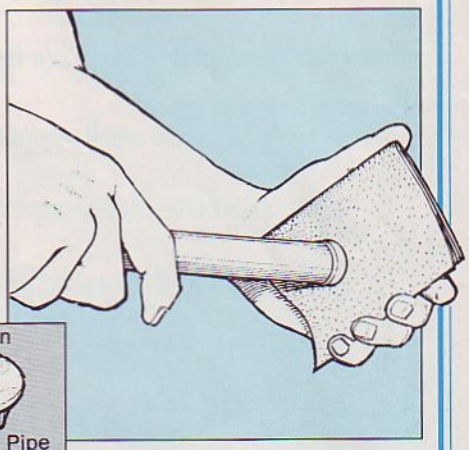

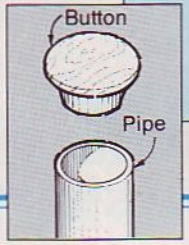

Continued on page 18

GREAT
ENCOURAGEMENT
FOR
SHIPWRIGHTS!

All gentlemen shipwrights and able bodied modelists who have a mind to provide for themselves amusement and satisfaction through the traditional craft of ship modeling, an opportunity now offers to acquire, through the minimal cost of one Colonial Dollar ($1.00), a catalog of fine and unique ship model kits, plans, books and fittings from the renowned company of Model Expo located in Mt. Pocono in the state of Pennsylvania.

Send $1.00 for a catalog to:

MODEL EXPO, INC.

Dept. WDC2, PO Box 1000, Mt. Pocono, PA 18344

Name _____

Address _____

City _____

State _____ Zip _____

Do-It-Yourself Kits

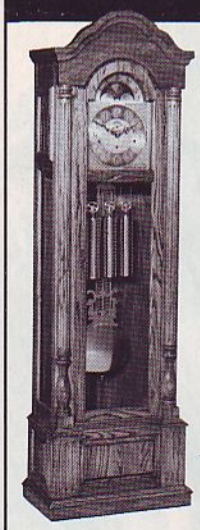

Factory Direct Clocks and Furniture

Also Assembled and Finished

- Grandfather Clocks, Mantel and Wall Clocks
- Curios, Tables, Chairs, Desks, Cradle...and more!
- Solid 3/4" Black Walnut, Cherry, or Oak
- Heirloom Quality
- Solid Brass West German Movements and Dials
- Money Back Guarantee

I am interested in
☐ Do-It-Yourself Kits
☐ Finished Clocks
☐ Finished Furniture

SEND $1 FOR COLOR CATALOG

Name _____

Street _____

City _____

State _____ **Zip** _____

(Please Print)

EMPEROR CLOCK COMPANY

World's Largest Manufacturer of Grandfather Clock Kits
Dept. 4518 Emperor Industrial Park
Fairhope, Alabama 36532 • Phone 1-205-928-2316

TIPS FROM YOUR SHOP (AND OURS)

Continued from page 16

Color-coded turning minimizes mistakes

As soon as you start the lathe, your carefully laid out pencil marks for a spindle turning become a confusing whirl. It's all too easy to turn a cove where you wanted a bead.

TIP: To avoid confusion, code your turning with colored pencils (not markers—they'll soak into the wood). Lay out the turning as usual. Then, shade the sections between the lines with different colors to represent different cuts—for instance, yellow for coves, and green for beads. Now, with the lathe running, the color stripes will guide you through the turning. Buy colored pencils at art-supply or stationery stores.

–Chuck Caranna, Columbus, Ohio

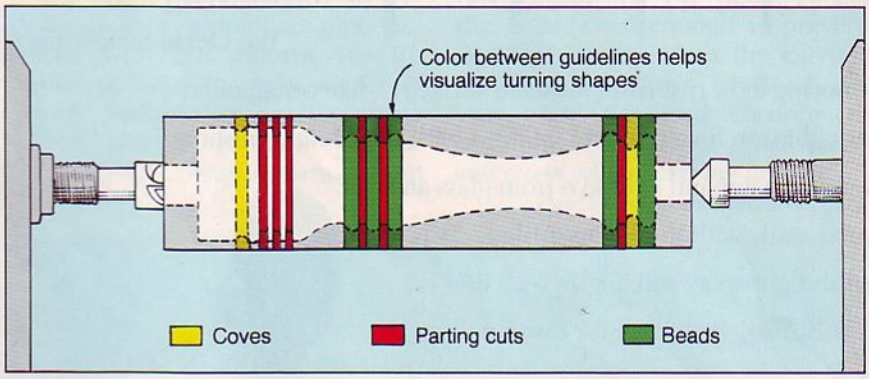

Saws stay straight, sharp in hanging rack

Tossing your handsaws into a drawer or toolbox is an invitation to dull teeth, and maybe a kinked blade. Yet, hanging them on a toolboard takes a lot of space.

TIP: Here's a saw rack that stores up to five saws in a 10"-wide space. And it makes putting them away properly a snap. Cut the cams, compartment sides, and back from maple or other hardwood using the dimensions shown in the drawing *below*. Attach the compartment sides to the back with screws and glue, and then secure the cams where shown. Make sure the cams move freely. Hang the holder.

Now, to use, slide the saw in from the bottom, pushing the cam up. When you release the saw, the cam will trap the saw blade against the side.

–E. Q. Smith, M.D., West Hills, Calif.

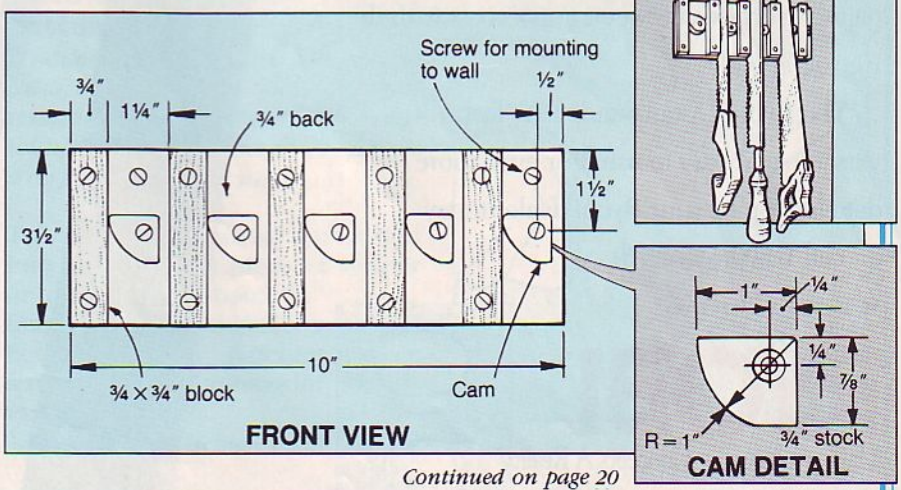

Continued on page 20

—TracTop®—
ARMRESTS

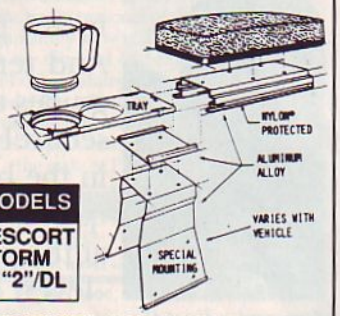

NEW MODELS
FORD ESCORT
GEO STORM
VOLVO "2"/DL

EXCLUSIVE SLIDING CUSHION with PULL-OUT TRAY. First Choice for comfort, features, and appearance. Install yourself.

HONDA ACCORD – CIVIC
VW JETTA–GOLF–PASSAT
VOLVO "2"/DL – 740/760
AUDI (1980-'87)
BMW "3" Series
SUBARU LEGACY – XT
PEUGEOT 405–PORSCHE 944
ACURA INTEGRA
NISSAN MAXIMA–SENTRA
SAAB 900
GM S-10 BLAZER–CAVALIER
TOYOTA CAMRY – CRESSIDA
MAZDA 626 – RX-7
Others.

Most models and years covered. Call/Write for free literature. Return guarantee. VISA/MC phone orders. Our 11th year as #1.

HUSCO ENGINEERING CO., INC.
17 Calvin Rd., Wilton, CT 06897 800-752-3181

Exclusively Performax
Precision Drum Sanders

5 YEAR ANNIVERSARY

Our Customers Say: "You know you really oughta tell people that the Performax really does what you say it'll do."

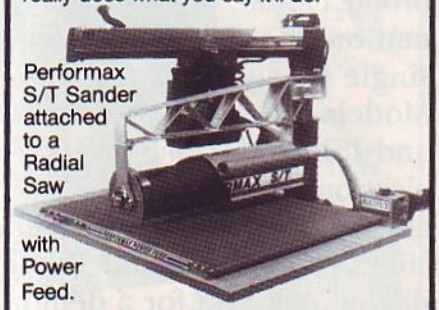

Performax S/T Sander attached to a Radial Saw with Power Feed.

So After 5 Years of Ads, Here Goes: It really is rigid. It really does sand 44" wide in two passes. It really is precise. It really is affordable. It really does have new and really improved abrasive fasteners. It really is the best drum sander money can buy. It really will exceed your expectations.

A REALLY BIG THANK YOU TO ALL WHO MADE THIS ANNIVERSARY POSSIBLE.

For a Free Brochure and the Dealer Nearest You Call
1-800-334-4910
or (612) 895-9922
or write: PERFORMAX PRODUCTS, W1
12211 Woodlake Drive, Burnsville, MN 55337

TIPS FROM YOUR SHOP (AND OURS)

Continued from page 18

Hardened screws overcome concrete-wall hang-ups

You need some more shelves and cabinets to organize your shop. But you dread the struggle that goes with attaching them to your shop's concrete or block walls and concrete floor.

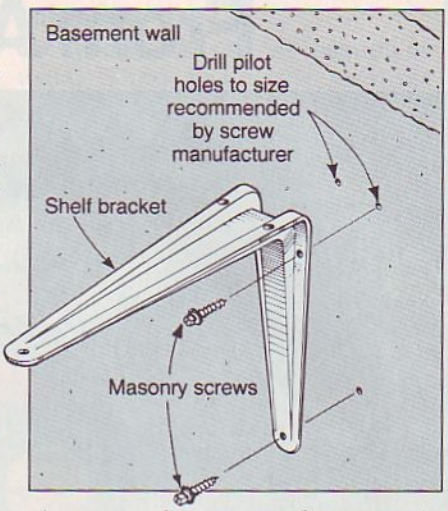

TIP: Don't drill holes, install anchors, and drive screws in order to secure shop paraphernalia to concrete walls and floors. Eliminate the middle step with masonry screws, available from many lumberyards, home centers, and hardware stores. These hardened screws drive right into a pilot hole drilled with a masonry bit, eliminating the need for lead or plastic anchors. When using masonry screws, pay careful attention to the manufacturer's recommendations concerning pilot-hole depth and diameter, as well as load capacity.

—WOOD magazine's IDEA SHOP

This bench stop eliminates need for benchtop holes

For planing, carving, and lots of other tasks, bench dogs or similar stops are a big help. But what if you don't want to drill holes in your benchtop for them?

TIP: Equip your workbench with a bench-stop system that uses a series of holes along the backsplash. First, make the stop from a piece of 1½×3" hardwood that's long enough to reach from the backsplash to the front edge of your workbench. Center a ½" hole about 1½" deep on one end. Glue in a dowel pin, letting ½-¾" extend from the stop. Now drill a row of ½" holes on 2" centers ¾" from the bottom edge of an auxiliary backsplash, and screw it onto the existing one.

To use the stop, just insert the dowel into one of the backsplash holes and clamp the stop to the front edge of the workbench.

—F. Eldon Heighway, Phoenix, Ariz.

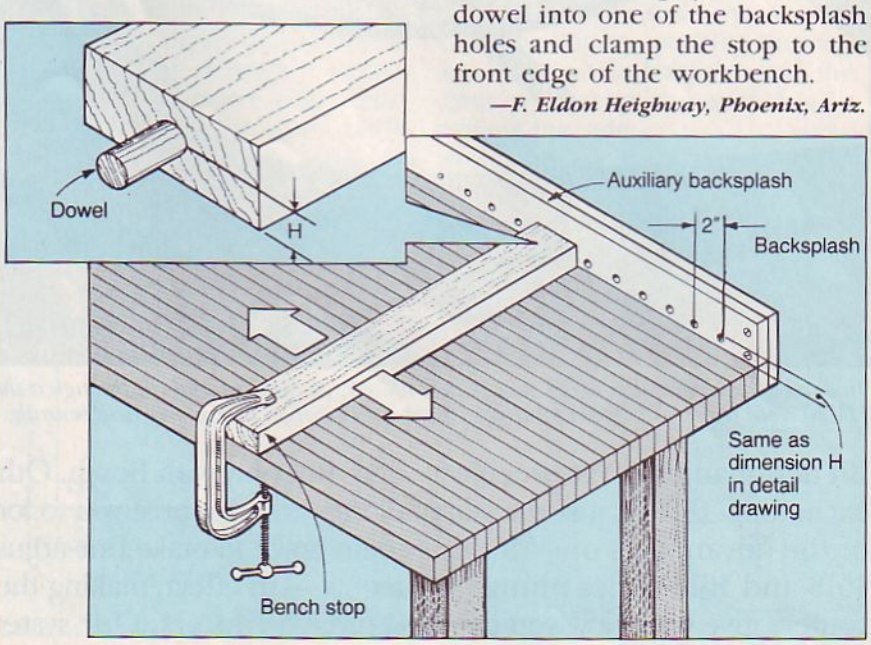

Continued on page 23

TIPS FROM YOUR SHOP (AND OURS)

Continued from page 20

Hearing yourself keeps extended projects on track

Often you'll start a project and not be able to get back into the shop for several days because of time pressures. By then, you may not remember where you were in the job, so you'll spend some of your valuable shop time just catching up.

TIP: Add a hand-held cassette tape recorder—the kind used for business memos—to your shop equipment. Then, talk to it about your project. Talk about steps you have completed or have left to do, machine setups, dimensions, things you need to check, or even ideas for future projects. Start the taping for each workshop session by announcing the date. (Reset the tape counter to 0, too).

Now if you're away from the shop for a few days, just rewind the tape to the beginning of the notes made the previous time and listen as your recorded comments bring you right up to date. Store the recorder in a resealable plastic bag to protect it from sawdust.

–Dan Wilks, Gowrie, Iowa

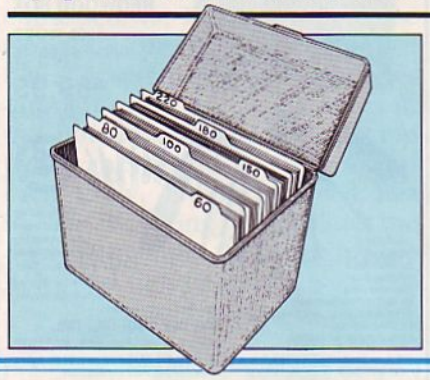

File this under smooth storage

You're sure you had a sheet or two of 180-grit sandpaper somewhere. But you can't find one in the stack of dog-eared sheets you dug out of the drawer.

TIP: Organize sandpaper the way you organize other pieces of paper—in a file. An inexpensive plastic file case with tabbed dividers makes a great storage box for sandpaper. File each grit in a separate file folder, and then you'll be able to see at a glance what you have. A letter-size case holds full sheets, while the 5×8″ size works great for ¼ sheets.

–Gary Zeff, Rancho Santa Fe, Calif.

Continued on page 25

Quality Woodworking Machines at Affordable prices from

Penn State Industries

Dept. W, 2850 Comly Road • Phila, Pa. 19154 • Info: 215-676-7609
Order Toll Free 1-800-288-7297 • **Visa, Master, & Discover Cards accepted**
When ordering - Add UPS Shipping Charges as noted • Pa residents add 7% Sales Tax
Call or Write for our New 24 Page Color Catalog

Two Way Sanders

Features of both models:
- Dust collector on belt
- Tables tilt to 45°
- Sealed ball bearings
- Easy belt tracking

6x9 Sander:
- Includes stand
- 9" Disc • 6"x48" Belt
- 3/4 HP, 1720 RPM
- **Free** Belts & Discs worth **$21.00**

#S69 ... **$219.95** (UPS $30)

4x8 Sander:
- 8" Disc • 4"x36" Belt
- 1/3 HP, 1720 RPM
- **Free** Belts & Discs worth **$14.00**

#S48 ... **$109.95** (UPS $8)

Super 125 Planer
***only* $359.95**

This machine will pay for itself time and again by planing your own wood. Finishes wood like machines many times its price.
- Portable at 65 lbs
- 26.2 fpm power feed
- HSS Knives 12-1/2" wide
- Motor: 16Amp, 8000RPM 2HP, 115V
- 1/8"Max depth of cut

#PLA .... **$359.95** (UPS $15)
Extra Knives ..$25/pair
Dust Chute ... $15/ea (UPS $3)
Stand ..... $39/ea. (UPS $6)

Variable Speed Scroll Saw
***only* $169.95**

Cuts intricate patterns in many different materials. Electronically controlled motor gives full power at all speeds 400-1800cpm.

FREE ACCESSORIES:
Dust blower • 1 dz blades • EZ Set permanent top arm blade holders • EZ jig to attach standard holders • 4 blade holders • Neptune 1-1/2" lettering guides w/6 patterns

Specifications:
- Motor: 1.3 Amp, 110V
- Throat: 15" deep • Stroke-3/4"
- Tilt 0-45° left • Cut Depth: 2"
- Blades: uses pin & plain end

#SVS ..... **$169.95** (UPS $10)

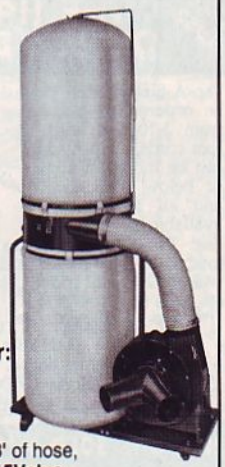

Dust Collectors

750 CFM Portable Dust Collector:
This 1-1/2HP model is lightweight and portable at less than 50 lbs.
• 1-1/2HP, 110/220V • 1 outlet @ 4" • 1 Bag @ 20 gal • Wt: 46 lbs • 750CFM • **Free:** 8' of hose, 1ea 4" to 3", 1 ea 4" to 2" adaptor.. **$15Value**
#DC3 ..... **$209.95** (UPS $10)

900 CFM Dust Collector:
This 1-1/2HP model allows for use in 2 or more machines & gives improved service for long runs of hose.
• 1-1/2HP, 110/220V • 2 outlets @ 4" • 2 Bags @ 30 gal • Wt: 120lbs • 900CFM • **Free:** 50' of hose, 1ea 4" to 3", 2 ea 4" to 2" adaptors.. **$40Value**
#DC2 ..... **$299.95** (UPS $30)

← 610 CFM Dust Collector:
This collector is perfect for hook-ups to almost any single machine.
• 1HP, 110/220V • 1 outlet @ 4" • 2 Bags @ 20 gal • Wt: 75lbs • 610 CFM • **Free:** 8' of hose, 1ea 4" to 3" & 4" to 2" adaptors.. **$15 Value**
#DC1 ..... **$199.95** (UPS $20)

TIPS FROM YOUR SHOP (AND OURS)

Continued from page 23

Get a better grip when machining dowels

It's hard to hang on to small dowels for cutting. Even with a V-block, you can lose control of those small cylindrical pieces.

TIP: Make a holder that grips dowels firmly. Start by drilling a line of dowel-sized holes through a piece of ¾ × ¾" scrapwood about 6" long. On an adjacent face, drill and countersink holes for two 10-24 × 1¼" flathead machine screws. Then, rip the piece along the centerline of the dowel holes. Insert the machine screws through the countersunk holes in the bottom piece, install the top piece, and thread a wing nut on each screw. To hold a dowel, just loosen the wing nuts, slide the dowel through the appropriate hole, and tighten the nuts.

–Frank Graham, Dartmouth, N.S., Canada

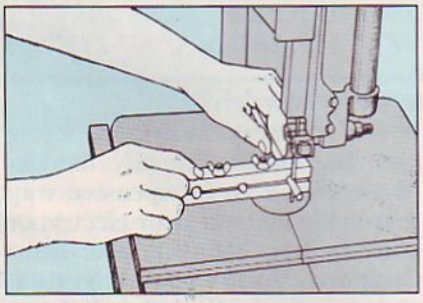

MORE TIPS FROM OUR WOODWORKING PROS

- Dress up painted projects with the decorative border design used on Santa's coat. The illustration on *page 41* shows you how to do it.
- The multi-step lamination method in the desk-set project on *page 55* yields a block that you can rip into attractive stock for boxes or other small projects. You also could laminate unique turning squares.
- Create your own decals or nameplates for your projects using dry-transfer lettering. See how we used it on the train project on *page 64*.

Our Customers Deserve The Best!

The Accu-Miter
18-34 Precision Miter Guage $149
Complete Line In Stock!

DEWALT
DW705 NEW! 12" Compound Miter Saw $359
DW3647-1/4"saw w/br, r pvt 148
DW306K 8amp vs recip s kit 158
DW318K top hdl vs jigsaw k 138
DW704 12" miter saw w/br. 319
DW682K NEWplate jointer kit 229
DW945K-2 12v, 3/8" VSR Cordless Drill Kit w/2 Batteries $174
DW944K 9.6v cdls kit, 2 bat 154
DW250 0-4000 drywall dvr 89
DW254 0-2500 deck scdvr 89
DW610 1-1/2 hp, 1/2" router 139
DW120K 1/2" RA drill kit 214
DW124K 1/2" joist&stud dr k 289

HITACHI
NR83A Full Head Stick Nailer $399
NR83AA clipped hd. stick nlr 429

JET
JJ6-CS 6" Long Bed Jointer $424*
JBS-14CS 14" wd bandsaw 449
DC-650 1 hp dust collector 229
JTS-10JF 10" saw w/Jet fnc494*
JWL-1236 12" wd lathe w/st 549
JCS-10A 2hp 10" cab. saw799*
JWP-15HO 15" planer w/st 1099*
*Price Includes Rebate

SENCO
SFN-1 1"-2" Finish Nailer $278
SLP-20 5/8" to 1-5/8" brad n. 299
SN325+ 6d-12d nailer 399

FUJI
HVLP High Volume Low Pressure Sprayer $599
HVLP SUPER 3 turbine 649

BOSCH
1581VS Top Handle Jig Saw w/Case & 30 Blades $179
1581VS top handle jig saw 129
1582VS barrel grip Clic jig s 129
3051VSRK3/8kyls kit w/2 bat 139
3283DVS dstls random sndr 95
1273DVS 4x24 vs. belt sndr 185
1370DEVS6" hd random sndr224
1613EVS microfine pl router 184
1615EVS3-1/4 hp vs pl. router 245

HITACHI
C8FB 8-1/2" Compound Mitre Saw $448
P12RA 12" planer/6" jointer 929
M12V 3-1/4 hp vs pl. router 224

NATIONAL RIVERSIDE CO.
30FAS 30,000 BTU Propane Heater $179
150FAS 150,000BTU prop htr 319

Elu
3338 2-1/4 HP Elec. VS Plunge Router $245
3380 jointer/spliner w/case 245

POWERMATIC
1791000 63 Artisan Saw W/Vega Fence $699
1660760 66 saw w/50" Bies1799

Lamello
TOP 10 Plate Jointer With Case $569
COBRA plate jointer 299
STANDARD plate jointer 419

makita
6095DWE 3/8" VSR, W/Keyless Chuck & 2 Bat. $149
2012 12" planer w/dust cht 469
6201DWE 9.6v kit w/2 batt. 169
LS1011 10" c. miter saw w/bl.439
6011DW NEW!12v, 3/8" vsr call

PERFORMAX S/T
Per-ST100 Radial Saw Surface Sander $279
Powerfeed attachment 309
ProMax II stationary sander 1489
SuperMax25" stationary sndr2269
SuperMax-25 25" drum sndr 2749
SuperMax-37 37" drum sndr 2995
SuperMax 37x2 37"dual sdr 3495

freud
JS100 Jointing System W/Case & 500 Assorted Biscuits $179 (FREE Glue Bottle)
JS100 jointing sys. w/case 164
FT-2000E 3.25 vs pl. router 209
94-100 5pc rtr cabinet set 159

PORTER-CABLE
333 NEW! Quicksand™, 5" Dustless Random Orbit Sander CALL
332 5" Quicksand PSA sndr call
334 dustless PSA sander call
550 pocket hole cutter call
7700 10" laserloc mitre saw call
352VS 3x21 vs belt sndr w/c 164
7116 24" Omni jig w/video 299
7334 Random Orbital Sander W/Case & 2 Rolls Paper* $159
7334 random orbital sndr* 122
7335 5" VS random sander* 132
7336 6" VS rdm sander* 138
*includes FREE 73333 sander dust kit
555 Plate Jointer W/Case & 500 Asst. Biscuits $184
555P plate joiner w/cse 169
9637 elect. vs tiger saw kit 139
690 1-1/2 hp router 132
691 1-1/2 hp D-hdle router 144
9345 6" saw boss kit 124
9853 12v drill w/keyless ch. 149

DELTA
34-782 3 HP Unisaw w/Unifence & Motor Cover $1599*
34-777 5hp Jet lock unis 1649*
34-781F 1.5unisaw w/unif 1399*
34-763 3hp Jet-Lock unis1449*
34-761 1.5hp Jet-Lock unis1189*
34-445 10" c. saw w/fence 729*
34-444 10" contractors' saw 619
28-283 14" 3/4 HP Bandsaw $679*
37-154 6" jointer w/stand 1029*
43-375 3hp 2sp hd shaper 1499*
22-661 13" planer w/stand 1169
31-730 6" belt/12" dc sdr 999*
37-350 8" jointer w/stand 1349*
36-220 10" comp. miter saw 234
50-179 3/4 hp dust collector 334
32-100 plate jointer 259
36-755 10" cabinet saw 899
43-355 1.5hp 3/4" wd shaper 699
22-540 12" Portable Planer W/Dust Collector Chute $399
33-060NEWsidekick trim saw call
43-505 router/shaper 279
11-090 radial drill press 285
40-640 20" vs scroll saw 319
46-700 12" vs wood lathe 429
11-950 8" bench drill press 145
40-560 16" 2 sp. scroll saw 179
*Price Includes Rebate

SKIL POWER TOOLS
2736-04 12 v, 3/8" VSR Keyless Drill Kit W/2 Batteries $134 (FREE Bit Set)
3400 10" tbl saw w/dado set 189
7484 5" random orbital sndr 99
1605 plate jointer w/200 bis. 119
77 7-1/4" worm drive saw 139

BIESEMEYER
50L12 50" Commercial W/12" Left $295
52L12 52" homeshop fence 235
40L12 40" homeshop fence 209
28L12 28" homeshop fence 199

Emglo
AM78-HC4V 1-1/2 HP Vertical Twin Tank $319

Milwaukee
0403-1 12 Volt VSR Cordless Kit w/2 Batteries & Keyless Chuck $169
6527 New VS super sawzall 165
6368 7-1/4" saw w/bl,cs,fnc 135
6125 5" r. orbital sander 119

BLACK & DECKER
2694 7-1/4" Super Sawcat W/Brake & Case $139

RYOBI
BT3000 10" Sliding Table Saw $549
JP-155 6-1/8" jointer/planer 299
RE600 3hp vs plunge router 209
AP12 12" portable planer 425
JM100K NEW plate jointer 209
TFD220VRK 12vcdls kit/2bat 169

WEDGE
SMPR-2 2' Pro Rail W/Module & Case $94
PR4 4' Pro Rail w/mod & cs 114
PR78 78"Pro Rail w/mod &cs 148

STANLEY BOSTITCH
N80S-1 16d Stick Nailer $359
N12B-1 coil roofing nailer 419
N80C-1 coil nailer 379
N60FN 1-1/4"-2-1/2" fnsh nlr 339

WOOD Dec. 92
1-800-358-3096
Box 1716 • Grand Forks, ND • 58206
Send $3.00 For 208 Page Catalog

FAX US YOUR ORDER! 1-701-746-2857

TOOL CRIB OF THE NORTH
DIVISION OF ACME Electric

FREE FREIGHT IN 48 CONTIGUOUS USA • SAME DAY SHIPPING • ERRORS AND PRICES SUBJECT TO CHANGE

PRANCER
When you push his tail he plays "Rudolph" while his red light nose blinks to the music. About 17" ht.
#01556N Plans 3.00
#04556NZ Plans and Parts Kit 7.25
Parts Kit Only:
#04556N 4.75/Ea, 12.90/3, 38.50/10

WELCOME
A boutique best seller! Not only does it say "welcome", but it plays a Christmas melody with lights blinking in time to the music. About 17" high.
#01570 Plans 4.00
#04570Z Plans and Parts Kit 12.00
#04570 Parts Only: 8.75/Ea, 23.85/3, 68.00/10

Parts Kits include all needed items to complete the project - EXCEPT LUMBER

MERRY CHRIS-MOOSE
Features a push button that plays "Rudolph" with flashing red nose. About 22" wide.

#01574 Plans 3.00 #04574Z Plans & Parts Kit 8.50
#04574 Parts Only: 6.85/Ea, 18.90/3, 57.30/10

CRAFTER'S MART
P.O. BOX 2342-W • GREELEY, CO 80632
72-Page CATALOG: $1, Free with any order. Check, MasterCard or VISA (include daytime phone, card no., exp. date & signature). PROCESSING CHARGE: Continental U.S. $4; AK, HI, APO/FPO $10; Canada $16; Foreign 20% plus $10 (U.S. Funds). CO Res. add 3% tax. Info: (303) 351-0676 PHONE ORDERS: 8am-5pm Monday-Friday, Mountain Time. **1 - 800 - 999-3445**

FREE
64-Page Catalog

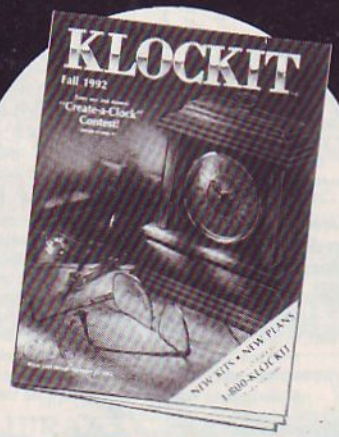

Unique Clockmaking & Wood Projects
American Quartz Movements • Watches
Dials, Hands and Numerals • Clock Kits
Whirligigs • Woodworking Tools and Plans
All at great low prices! Call **1-800-556-2548** today for your catalog or mail the coupon below.

Name _____
Address _____
City, State, Zip _____

KLOCKIT®
P.O. Box 542, Dept. WD122
Lake Geneva, WI 53147-9961

PRODUCTS THAT PEFORM

This kit helps you align table- and radial-arm saws

For safe and effective cutting results, the blade arbor, table, and fence of your tablesaw or radial-arm saw have to be properly aligned. Here's a reasonably priced tool that will improve your sawing accuracy and safety.

The Exact Cuts Alignment Tool consists of a large, extremely accurate, adjustable triangle and two precision-ground pieces of aluminun plate (called a "heel" bar and "arbor" bar). Both bars have holes for attaching to each other, and the arbor bar (the vertical bar in the photo *right*) has a hole for securing it to your saw's arbor. The 10"-long bars give you plenty of surface to align with the adjustable triangle.

Instructions included with the product show you how to align your saw's blade true to the table, fence, and miter gauge. With my saw set up correctly, I frequently use the product to adjust my saws for precise miter and bevel cuts. A chart included in the package shows exactly how to set up your saw for compound-miter cuts.

—Tested by Bob McFarlin

Exact Cuts Alignment Tool, $54.95 ppd. Exact Cuts Tool Co., 5306 Boy Scout Road, Florence, OR 97439. Call 503/997-2377.

How to turn any drill into a power screwdriver

If you've always wanted a screw gun, but couldn't justify the expense, here's an inexpensive way to quickly convert your electric or cordless portable drill. The Duro Optigrip chucks onto any drill, and has spring-loaded ball bearings in its front end that hold screws for one-handed driving. The all-metal accessory has an eight-position clutch that releases when the screw seats to the desired depth.

The attachment works quickly with a minimum of effort. I used a variety of screws (flat head, round head, pan head, etc.) without problems. Changing driving bits was a slight hassle because I had to use a needle-nosed pliers to remove the bits.

—Tested by Chuck Hedlund

Duro Optigrip, less than $25 from dealers nationwide. Call Duro Enterprises at 708/449-0236 for the dealer nearest you.

SWING-ARM SUPPORT

A HANDY HANGOUT FOR YOUR MOTORIZED ROTARY TOOL

Keep the motor end of your rotary tool up and out of the way and the flexible-shaft and business end close at hand with this convenient swing-arm support. We centered ours over one of our IDEA SHOP workbenches where we plan to do a lot of carving.

After using the tool, just loop the end of the flexible shaft through one of the holes in the swing-arm support and then swing the arm to one side until you need it again.

Project Design: James R. Downing

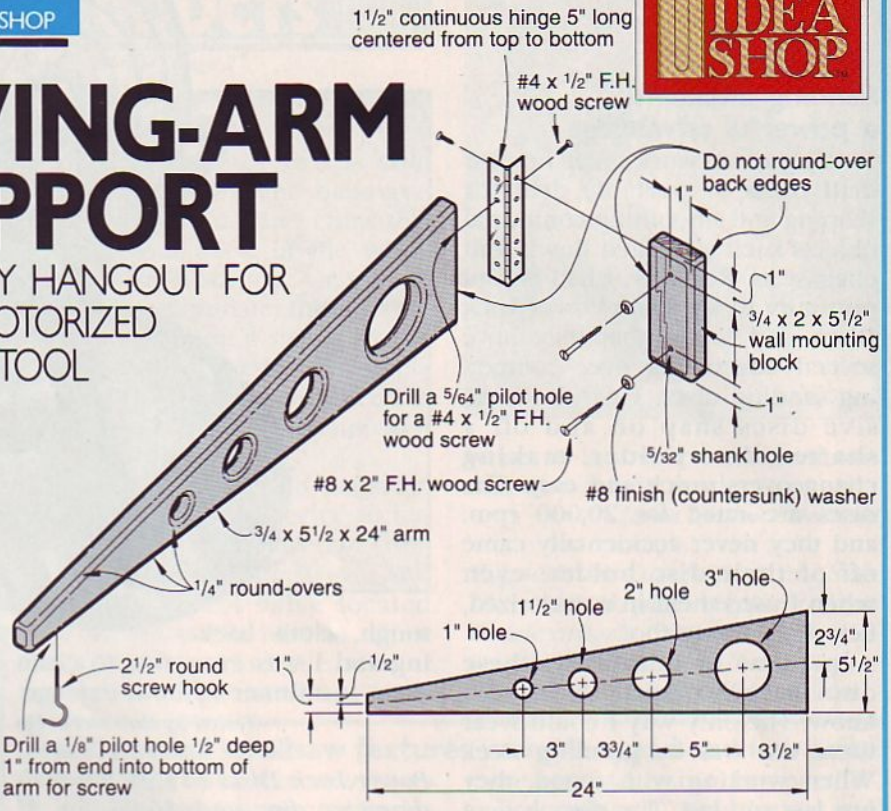

Photograph: Wm. Hopkins

Illustrations: Kim Downing

We've helped hold it together... Since 1903

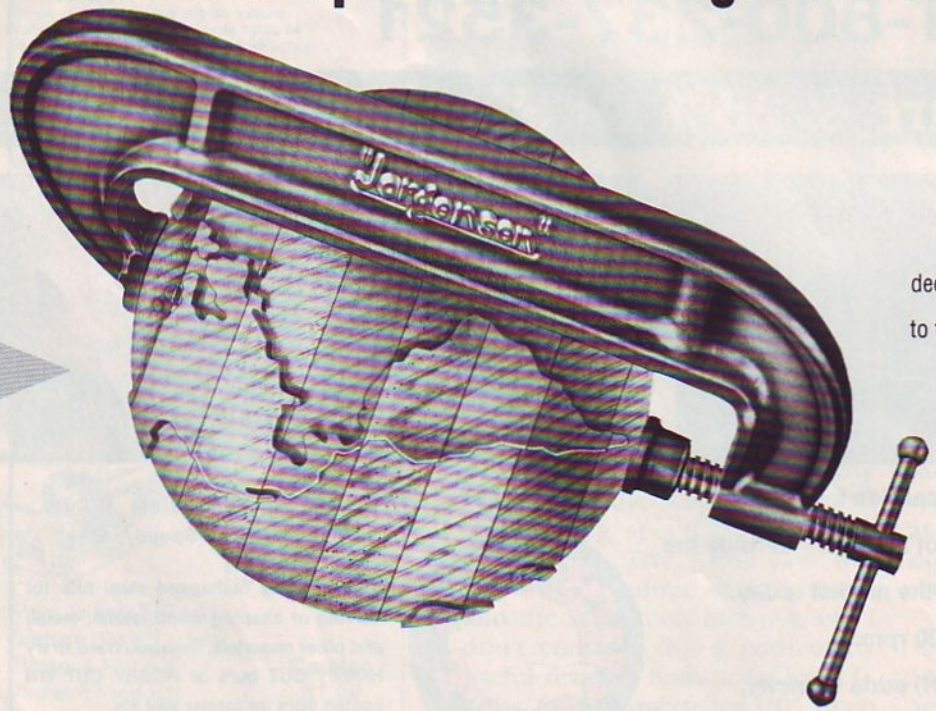

"Jorgensen"®
"Pony"®
"Adjustable"™

Quality in our products... dedication in our service. We've held to these commitments just as you've held up our Clamps and Vises as your standards to each new generation since 1903. We'll continue to hold consistently to our traditions of excellence.

Write for our Catalog SEND $1.00
Adjustable Clamp Company
410 N. Ashland Avenue, Chicago, IL 60622

ORCHESTRATING MAPLE

What's the real difference between a fiddle and a violin? Just ask Tulsa luthier Bill Rohde.

Cowboy philospher of the Thirties Will Rogers declared that the difference between a violin and a fiddle was that you played a violin sitting down and a fiddle standing up. Oklahoman Bill Rohde has another observation: "A violin gets carried in a case, but a fiddle goes in a sack."

Now, Bill isn't trying to outdo Rogers' homespun humor. It's just that the 78-year old Tulsan knows violins like the back of his hand. He's made over 130 of them, you see, plus a few violas and some mandolins to boot.

Continued

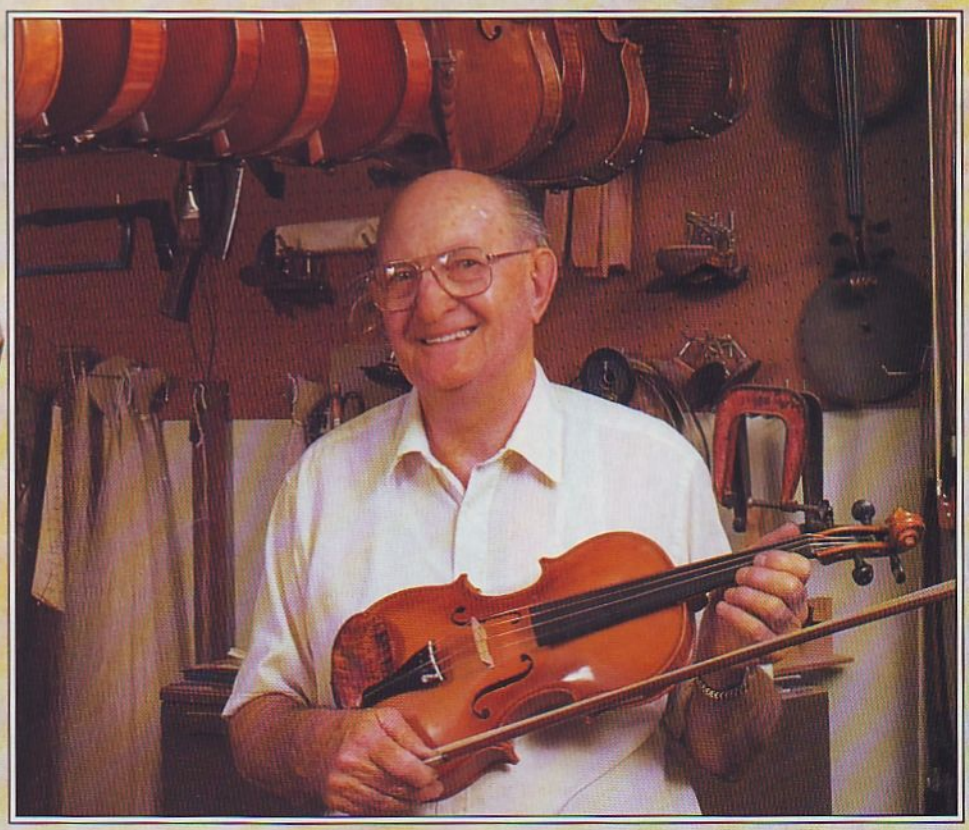

Curly—or fiddleback—maple doesn't sound better than maple without figure, but Bill says it looks a heck of a lot prettier. His custom-cooked finish contributes to that.

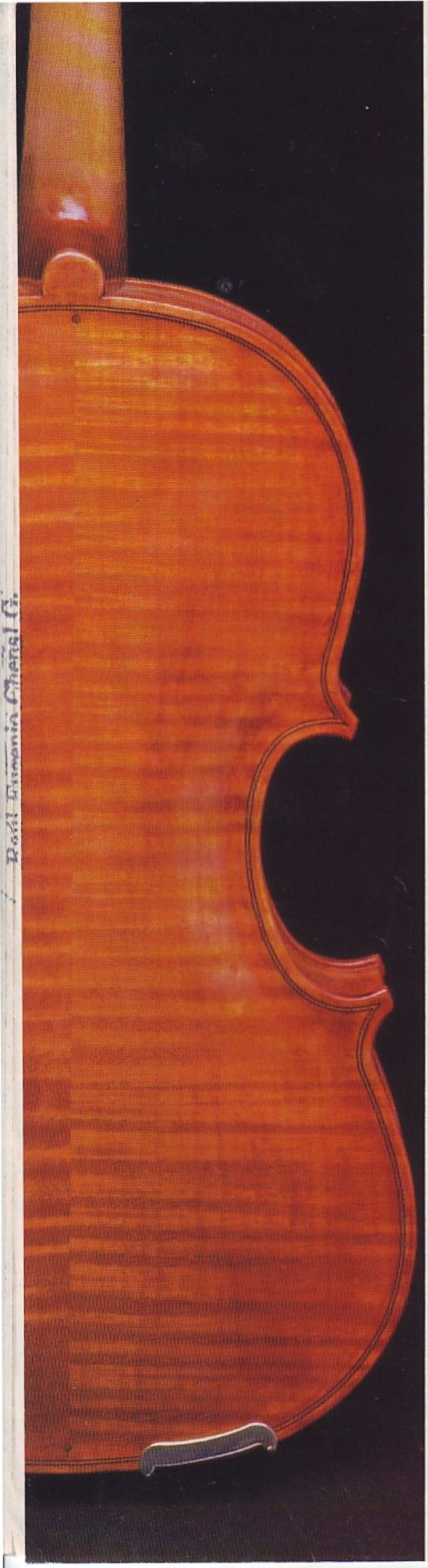

"It was my mother's brother, O. W. Staton, who taught me violinmaking," comments Bill as he holds up one of his instruments to inspect its finish. "He lived in Denver, and before he retired, O.W. had built custom-made furniture. But he always had enjoyed playing the violin, and wanted to make one. So, in retirement, he did just that, and went on to build quite a few. He was on his 91st when he died."

Bill spent the better part of his adult vacations in Denver assisting with the violinmaking. And when O.W. died, Bill took over and, in fact, finished O.W.'s 91st violin back in Tulsa with the tools his uncle had left him. That was in 1958.

As a Tulsa-based crew chief for American Airlines until his retirement, Bill had supervised electricians, plumbers, millwrights, electronics people—all the trades it takes to keep airplanes flying. And in his off hours, he built violins. Now, he's making them full-time. His instruments represent good value, too.

"I sell mine for $1,500," he says. "But anywhere back East they'd sell for twice that." Still, in Bill's part of the country, his instruments have found favor, especially with symphony musicians. "I've got violins in the Tulsa Philharmonic, the Oklahoma City Symphony, in the Jackson, Mississippi Symphony, and in Lexington, Kentucky—they just get scattered around," he notes.

Wood to fiddle with

"It takes about 100 hours—give or take a few—to make a violin. And I spread that out over a couple of months," Bill comments. When he is ready to begin one, though, he doesn't go far for wood. Uncle O.W., it turns out, left Bill more than tools and a legacy. He left plenty of wood. Just the right kind, too—curly maple for the body, spruce for the top.

"A violin's body—the sides and back—is made out of curly maple. So is the neck," the lively luthier explains. "That's generally used because it's not only a pretty wood, it's good tonally, too. The top is Engleman spruce. And I got quite a bit of both."

As the story goes, Bill's uncle made a trip back to his birthplace

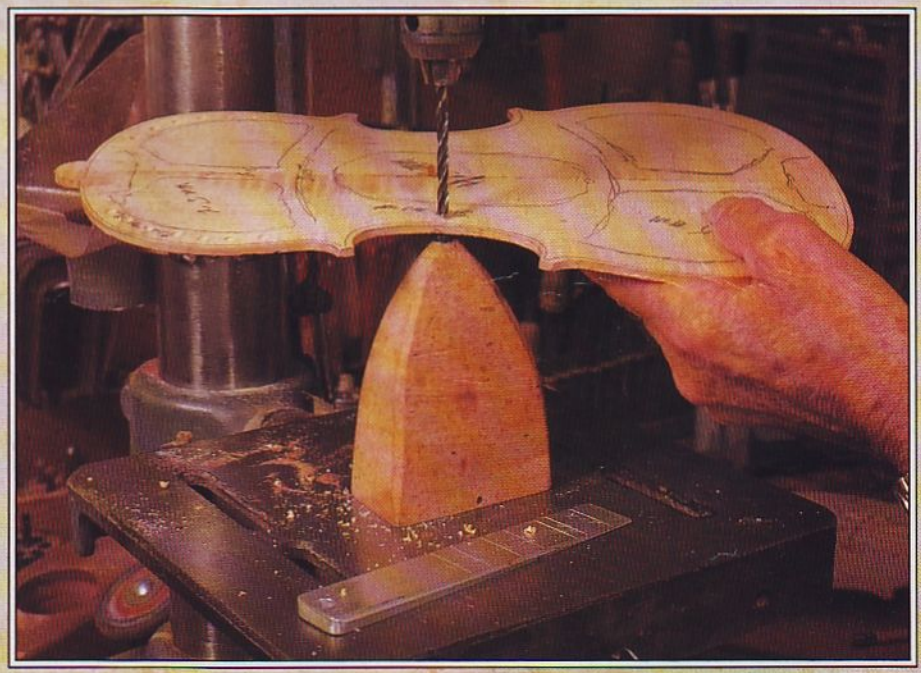

For the complex drilling sequence at the drill press to remove wood from a back, Bill follows a metric depth chart. He'll later clean out the holes by hand.

in Illinois early on in his violin-making career. While there, he discovered a large hard maple tree. It measured 52″ in diameter and was free of branches for the first 16′. And as luck would have it, all the wood was curly.

"From that tree came enough wood to make 630 violins," Bill declares. "My uncle even sold off wood to other violinmakers. And at the time he died he still had enough to make a couple of hundred violins. So far, I've made 131 violins out of that same tree, besides some violas and mandolins. My son has made at least 14 or 15, and I've still got enough for 25 or 30 more."

Curly maple and Engleman spruce may be Bill's primary violin woods, but other species play a part, too. He makes the tuning pegs, for instance, from kingwood, rosewood, amarillo, or bubinga—all stout hardwoods. "The wood needs to be hard enough so that the string doesn't cut into it," notes Bill. "And I usually make the pegs, tail piece, and chin rest all of the same wood."

The bow of each violin also contributes to the mix of wood. For the body, Bill likes pernambuco. He fashions the frog (the nut that holds the bow hair) from mountain mahogany, a dense, hard, and heavy wood from Northern California and Oregon.

Sound basics: backs and tops

Bill handcrafts each of his instruments, and therefore each is different. "Regardless of how careful a person might be in carving out the backs and tops, there's not going to be any two of them identical. The slightest difference in thickness can affect the sound—I won't know what it will sound like until the varnish is dry. I play very little, but enough to tell if one's got a flaw in it."

To get an idea of the parts in a violin, take a look at the drawing, *right*. Now, follow along through the shaping of a back, keeping in mind that the spruce top, which duplicates the back in size, shape, and thickness, is made exactly the same way.

The maple for Bill's violin backs was specially sawed from the log in wedge-shaped boards that in profile look like the cutaway view of a wooden shingle. It takes two pieces of the wedge-shaped wood, each about 15″ long, 5″ wide, and tapering in thickness from ¾″ to ⅜″, to make a back. Bill butt-joins the pieces together with glue along their longest and thickest edge, then begins the shaping process.

"I rough out the general contour of the back with a carving duplicator I have in the garage," Bill admits, almost sheepishly. Next, he picks a template for the pattern of the back (or top). "I have patterns that look like models made by the masters back in the late 1600s and 1700s," he mentions.

Continued

Spruce tops can be hand-carved to thickness, such as Bill is doing here, but hard maple requires machine tools.

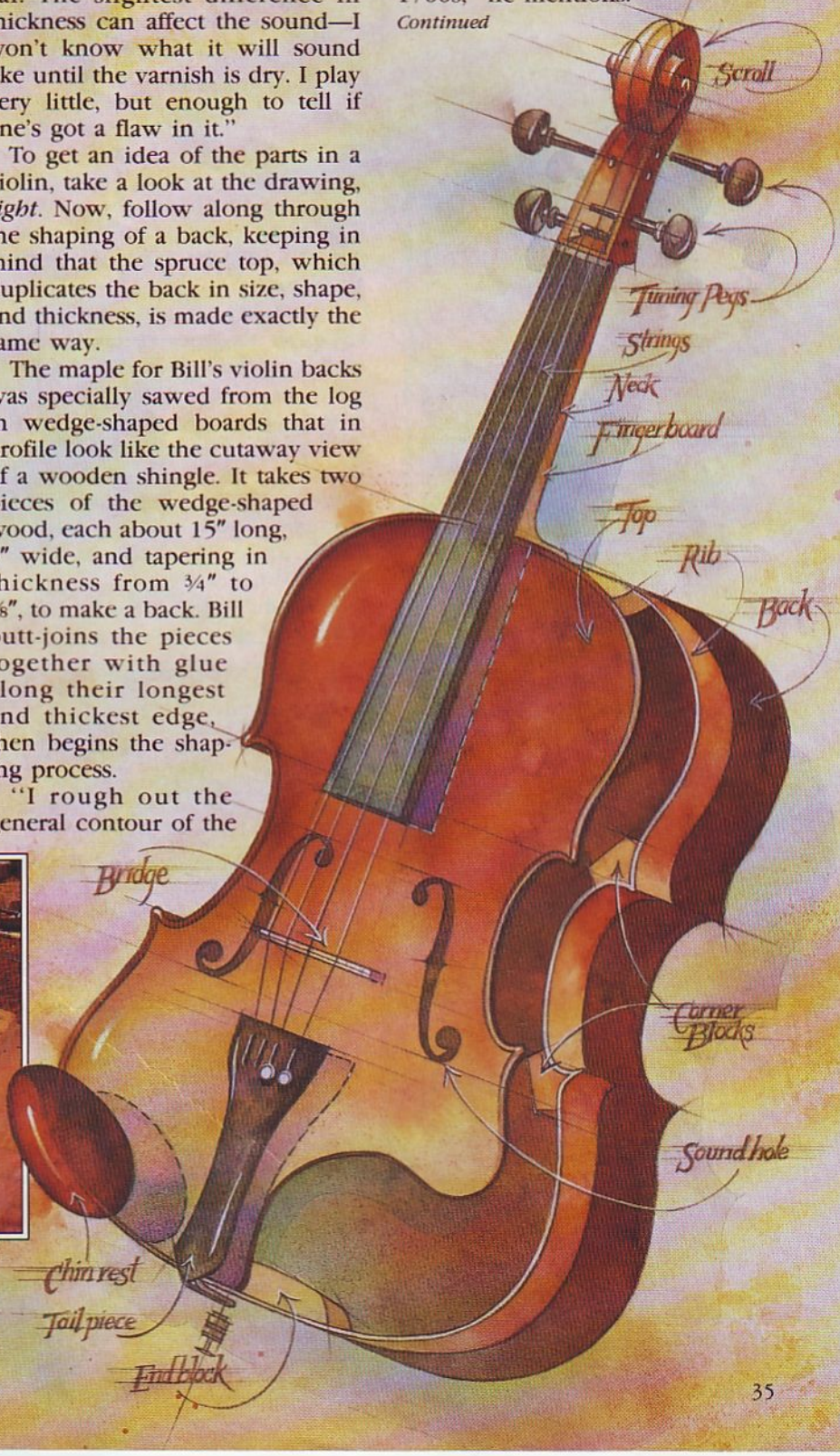

The luthier carefully outlines the template on the wood. Then at the bandsaw, he saws the back to shape. Still full thickness, the back must now have more wood removed—a very time-consuming, crucial process.

Bill's finished backs vary in thickness from 2 millimeters (about ⅛") along the edge to 3.5–4 millimeters in the center. But Bill doesn't leave the variety to chance.

"I roughly map out the areas of different thicknesses on the back with a pencil, then I'm ready to start drilling the depth-guide holes," he says, walking to the drill press. With a metric measure, Bill sets the depth stop on his press to the first depth of 2 millimeters. Then, with a backing block under the back, he begins the drilling.

"When I get all the holes drilled, I still have to scrape out the bottoms. I take calipers to them to measure. There's plenty of handwork," Bill adds.

He removes the wood remaining between the holes with a disc sander chucked in the drill press. For tops, it's a different story.

"I hand-carve them with a hooked knife or a gouge because the quarter-sawed spruce is a lot softer wood," he says, peering up from his work.

Violins take a ribbing

Leaving nothing to chance, Bill relies on a mold to shape his violins. It serves to anchor the six spruce blocks to which he'll glue the maple sides, or ribs. "All I have to do is trim the blocks up a bit with a knife so that they fit the mold," he explains. "Then, the ribs go on with a drop of glue." First, though, he must make them.

Bill resaws his curly maple into strips about 3 millimeters (⅛") thick at the bandsaw. But getting them down to the final thickness takes some sanding. "I chuck a drum sander into the drill press and run the ribs past it several times, adjusting the fence I in-

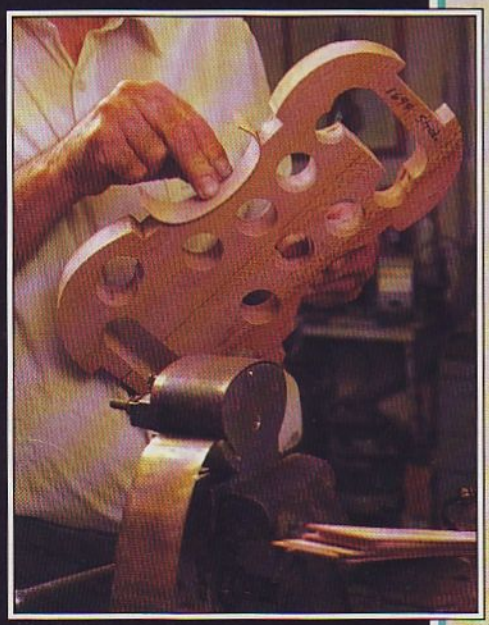

◀ Bill built the heated shaper (in the foreground) that he uses to curl the violin's sides, or ribs.

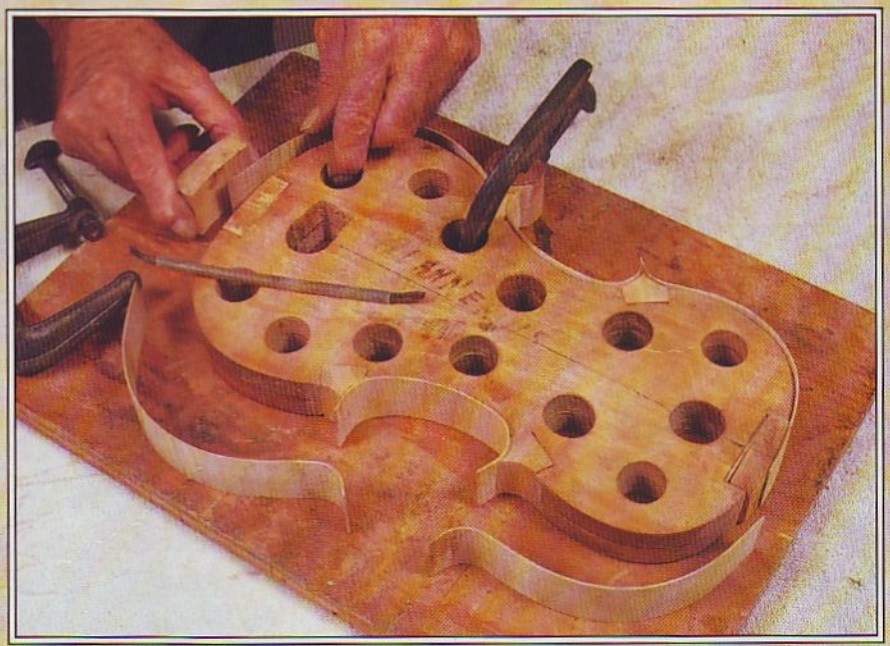

▲ The violin mold holds the triangular glue blocks to which the luthier attaches the thin, curved sides.

stalled on the table until I get them to about 1.5 millimeters," he says. Next comes the bending.

To bend a strip, it first has to be wet, so Bill soaks it in water for a few minutes. At his bench, he places the strip on the heated fixture, locks it in, and waits a minute. Then, it's ready for the mold.

From there on, assembling the body runs like clockwork—regulated and precise. Bill miters the ends of each strip for perfect joints, sands them, and glues them to the blocks.

Purfling, the decorative inlay of contrasting wood that travels around the top edge of the violin, comes next. "When I get ready to purfle," says the luthier, "I trace a mark with my knife about ⅛" from the edge. Then, with a 1/16" straight router bit chucked into my drill press, I rout it out for the thin inlay, kind of like pin-routing. Then I glue it in. I don't always purfle perfectly," he says, amused at his words, "but I try."

Next, he takes the mold out and attaches the back. Now comes the pliable black willow lining. From the other side of the glue blocks, it traces the path of the ribs and reinforces them. The lining—flush with the sides—also adds more gluing surface for the top.

Topping off the instrument

The top may be the identical twin of the back in size, shape, and thickness, but there's an important difference—the sound holes. "The top has to have those cutouts or the sound can't get out," explains Bill. "And the shape and size of the cutouts has to be somewhat compatible with the size of the instrument. If they're too narrow, they impede the tone; too wide, they weaken it."

After tracing the shape of the sound holes on the top from a pattern, Bill cuts them out with a carving knife. He then can sand the top, install the base bar on the underside and glue the top in place on the nearly completed violin (he adds the bridge later).

Bill next selects a hard-maple neck that he has deftly carved with a scroll pattern and drilled for the tuning pegs. The fit to the body must be an exact one. After mounting a tailpiece and chinrest of exotic wood to the top, the violin is ready for color.

Cooking up color

Bill makes his violin varnish from two simple ingredients—gum turpentine and linseed oil. It's the cooking that makes the difference.

"You got to do it out in the backyard," the craftsman explains. "First, though, I take about a gallon of gum turpentine and put an aquarium bubbler in it and let it aerate for about six weeks. That evaporates away a lot of the volatile things in the turpentine. Then, when it gets thick and dark like molasses, I start cooking it, being careful because it can flash over.

"I cook the turpentine until it becomes a rocklike resin," he goes on. "Then, I cook the resin with about a gallon of linseed oil at about 600–700° F until I can take a drop of it—after cooling a bit—and stretch it out on my finger about an inch or so, like a thread. When it stretches that far, I know it will dry."

With a brush, Bill lays down 15–20 coats on a violin, sanding between them with 400-grit. The rest is easy work. He fits the wire strings, installs the tuning pegs, then fiddles a few notes to check its sound.

"The sound gets better with age, you know," he says, nodding. "In 200 years, it could be as great as a Stradivarius."

Written by Peter J. Stephano
Photographs: Bob Hawks

▲ Bill sights along a violin neck to check it for straightness. With the small template in his hand, he gauges the neck's roundness.

▲ The fine strong hairs of the violin bow come from the tails of Siberian horses. Here, Bill straightens them.

KRIS KRINGLE GOES CROSS-COUNTRY

Deep snow and drifts can't keep Santa from merrily making his rounds—he just straps on his skis. At least that's the way Oregon newspaperman and woodcarver Craig Lockwood figures it. Craig's rendition of Santa striding along on skis is popular in ski country. Now, here's how to carve one for yourself.

Photocopy the full-sized pattern on *page 39*. Trace the *red* body outline onto a 10" length of 2×8 pine or cedar. Trace the *green* arm outline twice onto an 8" piece of 1×4. Bandsaw the body and arms.

Drill a 5/16" hole through the body where shown. Designate one arm the right arm, and hold it against the right side of the body. Align the shoulder and the curve on back of the upper arm with Santa's shoulder and back.

Insert a pencil through the hole from the left side and mark a center point on the arm. Repeat for the left arm. Drill a 5/16" hole 3/8" deep at the mark on each arm. Cut a 2¼" length of 5/16" dowel to attach the arms. Don't attach them yet, though.

Draw some lines, and carve

Now, on both sides of the body, pencil in the *blue* lines designating Santa's waistline and beard and the fur trim on his coat and hat. Draw the flapping skirt of his coat on the right side only. Those lines meet in an inverted V about ¾" below Santa's waistline on the front of the body. Outline the fur cuff on both sides of each arm.

Stop-cut these lines. Then, with your knife or a gouge of shallow sweep, cut to Santa's waistline from each side of the pattern line. Carve about 5/32" deep at the pattern line, curving down from the original surface about 3/8" from the line on either side.

Round the corners of the body, *except* on the back above the horizontal centerline of the dowel hole. (Rounded corners at the shoulders would make Santa look odd with his arms attached.)

Glossary

Stop cut: An incision along a pattern line. The stop cut allows you to carve to a line without chipping out wood beyond it.

When stop-cutting with a knife, hold the blade so it is perpendicular to the work surface. With a V-tool, keep the edge of the blade nearest the pattern line vertical. Stop-cut with a straight chisel or gouge by stabbing the tool straight into the wood.

Sweep: The side-to-side curvature of a gouge, designated by numbers 3–11. (1 is a straight chisel; 2, a skew.) Higher numbers denote greater curvature.

Text continues on page 40

TOOLS AND SUPPLIES

Stock:
2×8×10" pine or cedar
1×4×8" pine or cedar

Tools:
Gouges: 8mm no. 3 or 5, 10mm no.7
V-tool: 6 mm no. 12
Knife: Bench-type carving knife
Power carving (optional): Conical carbide burr for texturing beard, cylindrical cutter for rough shaping

Finishing materials:
Acrylic artist's colors (Delta Ceramcoat colors listed; you can use similar colors in other brands)
Navy blue
Deep river green
Old parchment (cream)
Antique white
Mendocino (burgundy red)
Bright red
Burnt sienna
Nugget gold (metallic)
Charcoal
Medium flesh

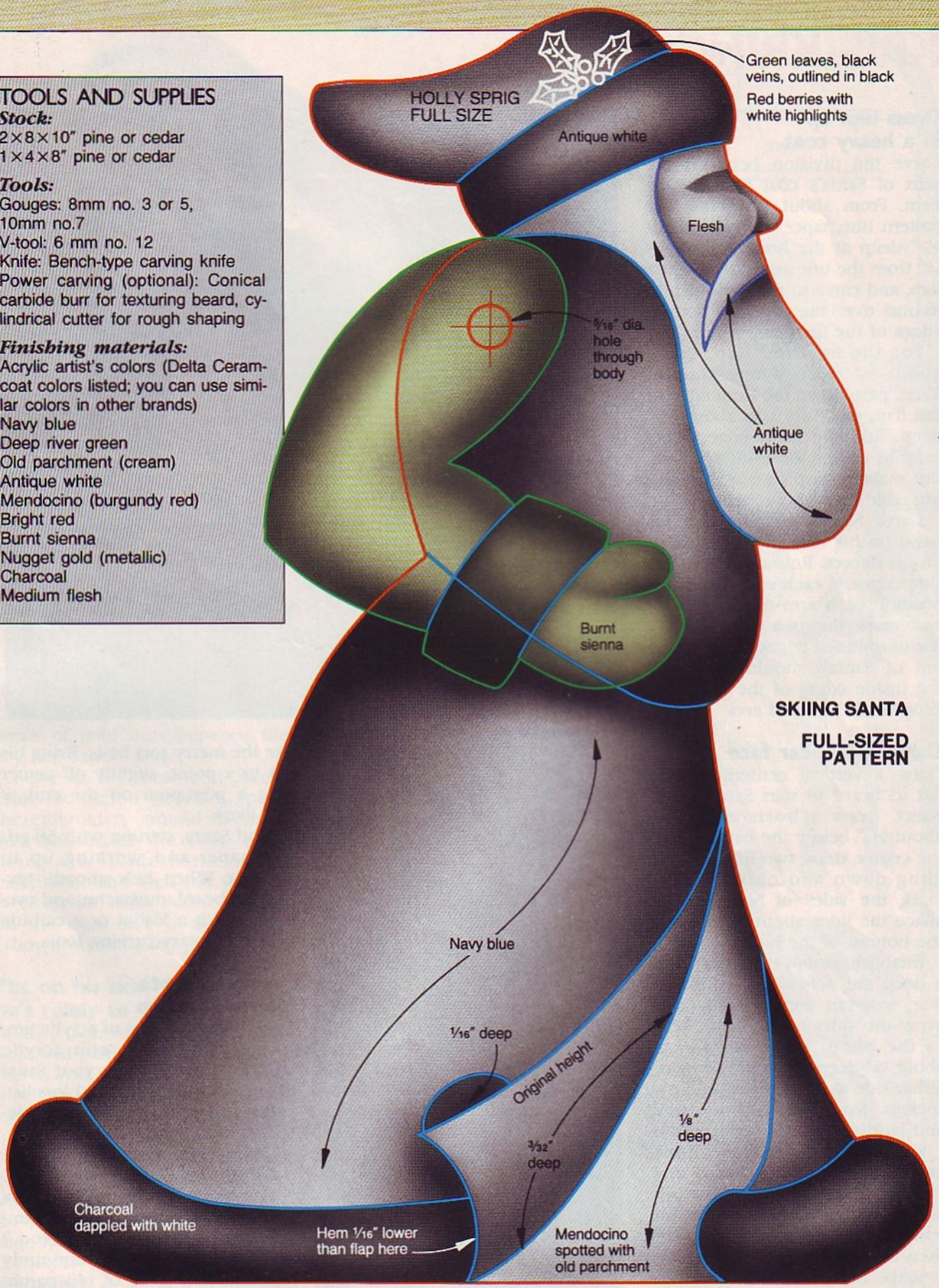

SKIING SANTA

FULL-SIZED PATTERN

KRIS KRINGLE

Dress him up in a heavy coat

Carve the division between the skirt of Santa's coat and the fur hem. From about ½" above the pattern line, taper down to about 3/32" deep at the line. Start about ¼" from the line around the open flap, and carve to the same depth. Round over the top and bottom edges of the fur hem.

For the swirling flap, carve about ⅛" deep where shown. Then, pare down the front edge of the flap, tapering it to about 3/32" deep. Roll the front edge to resemble curled or folded fabric, but make a crisp line at the trailing edge (see photo *right*).

Carve Santa's mittens, the fur band on his hat, and the cuffs on his sleeves. Round the outside edges of each arm. Then, position each arm temporarily, and mark the part adjacent to the unrounded edges on back and top of Santa's shoulders. Round the inside edges of the arms, except for the marked area.

Santa lets his heavy coat flap open. Undercut the edges of the flap slightly as you carve to create shadows. Rounding the folded-over edge of the flap makes it look more realistic. Carve surface as smooth as possible with gouges, and then sand.

Carve a familiar face

Draw a vertical centerline from hat to beard to start Santa's face. Next, draw a horizontal line about 3/16" below the hat. From the center, draw two lines angling down and outward to mark the sides of Santa's nose. Space the lines about ⅜" apart at the bottom of the nose.

Establish Santa's eyebrows with a deep cut across the horizontal line. Stop-cut and carefully trim away the sides of the nose. Refer to the photo *right* as you cut about ⅛" deep along the brow on either side to form cheeks and eye sockets. Sketch in his mustache and hairline (*purple* on pattern).

Stop-cut the mustache lines, and then carve the beard and cheeks to set the mustache out. With a V-tool or knife, carve the hair line beside Santa's face, and then the bottom of his beard.

Shape the nose, and soften the facial features to make Santa look like the merry sort he is. Bring his hat to a point, slightly off center (put a pom-pom on the end, if you like).

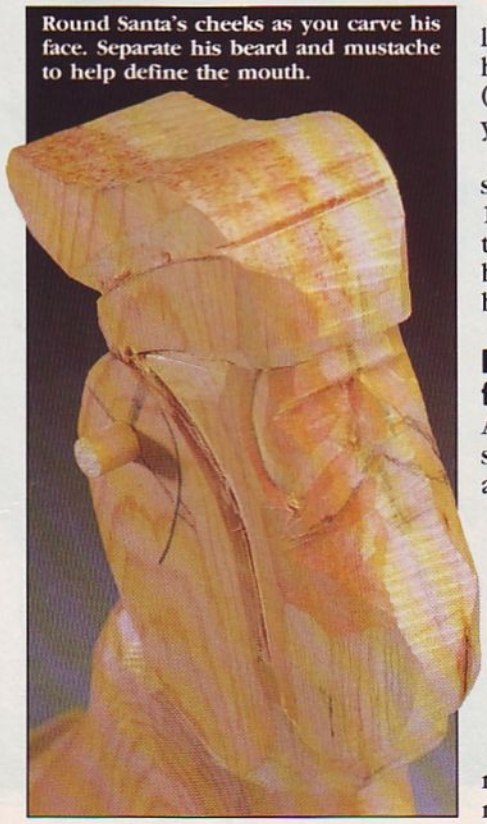

Round Santa's cheeks as you carve his face. Separate his beard and mustache to help define the mouth.

Sand Santa, starting with 50-grit sandpaper and working up to 120-grit. When he's smooth, texture his beard, mustache, and eyebrows with a V-tool or a carbide burr and rotary carving tool.

Decorate Santa for the holidays

Apply a primer coat of acrylic gesso before painting with acrylic artist's colors. To paint your Santa to match ours, use the colors listed on *page xx* or similar. Or, design your own paint scheme.

Apply the base color to Santa's coat, arms, and hat. (Though our Santa wears a blue coat, forest green and traditional red look great, too.) Paint the inner skirt burgundy red, and add spots of old parchment to simulate a print fabric.

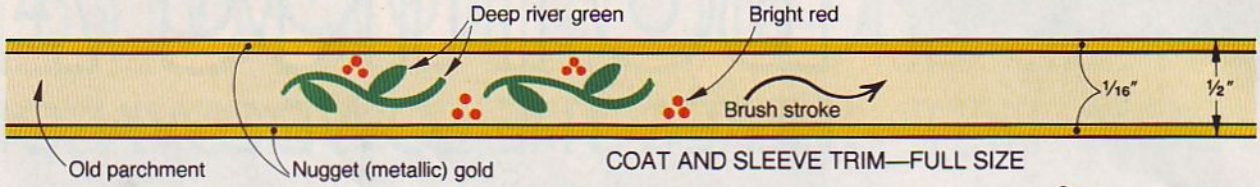

COAT AND SLEEVE TRIM—FULL SIZE

Paint the fur trim charcoal. When that's dry, dapple it with antique white. Use a stiff brush or a sponge, applying the white with a dabbing motion. Paint Santa's face flesh. Paint his eyes (see Eyes illustration, *right*), and highlight his cheeks with thinned red paint. Then, color his beard and mustache antique white, and his mittens burnt sienna.

Draw a belt about ¼" wide around Santa's waist, and paint it burnt sienna with black outlining. Paint a metallic gold buckle on the front, and outline it in black. Add a couple of gold buttons between Santa's beard and waist.

Paint a gold key on his left side (see pattern, *far right*). Place the key at an angle to make it look as if it's swaying as Santa skis, and then simulate a keychain with a series of gold dots between the key and Santa's belt.

Refer to the Coat and Sleeve Trim illustration *above* to paint the embroidery around the cuffs and bottom of the coat. First, paint a ½"-wide band of old parchment, and then add the other elements. Paint the holly sprig on the right side of Santa's hat (shown on full-sized pattern).

Put on his skis; he's ready to go!

Apply a clear finish to the skis and sled, and paint any other accessories as you wish. Glue the skis to the bottom, with the left ski advanced about ¾" past the right.

If you want him to carry the tree or pull the sled, drill the necessary holes through Santa's mittens. Glue the arms on with the dowel, swinging the left arm slightly upward.

For his pipe, drill a hole at a slight angle down and to the side

where his mouth would be. Glue on the accessories, scraping paint away as necessary for a good bond. Finally, put some presents into Santa's bag.

Equip Santa properly before you send him out

At the very least, Santa will need a pair of skis. Scrollsaw the skis from two pieces of ½ × ½ × 10" cedar or other stock (see pattern *right*). Carve the tips to points

Here are some other Santa accoutrements you can make:

- ***Sled*** Cut the runners and top from ⅛" stock. Drill the runners to accept a ⅛" dowel 1⅝" long for the crossbar. Glue together. Dye a piece of cotton twine in tea, and then tie it to the crossbar.
- ***Tree*** Drill a ⅛" hole ½" deep centered on one end of a ¾ × 3 × 3½" piece of stock. Cut the tree to shape, carve the edges. Insert a ⅛" dowel 2" long into the hole for a trunk.
- ***Pipe*** Cut from ⅜" stock. Drill a 3/16" hole in the bowl, and round the bowl corners. Carve the stem slightly narrower, and round it.
- ***Bird*** Cut from ½" stock. Round the head and body, separating them with a slight hollow. Taper the beak and tail.
- ***Bag*** Using the sled top as a pattern, cut two pieces of fabric or thin leather. Sew them together, leaving the wide end open. Fill the bag with small packages or novelty items.

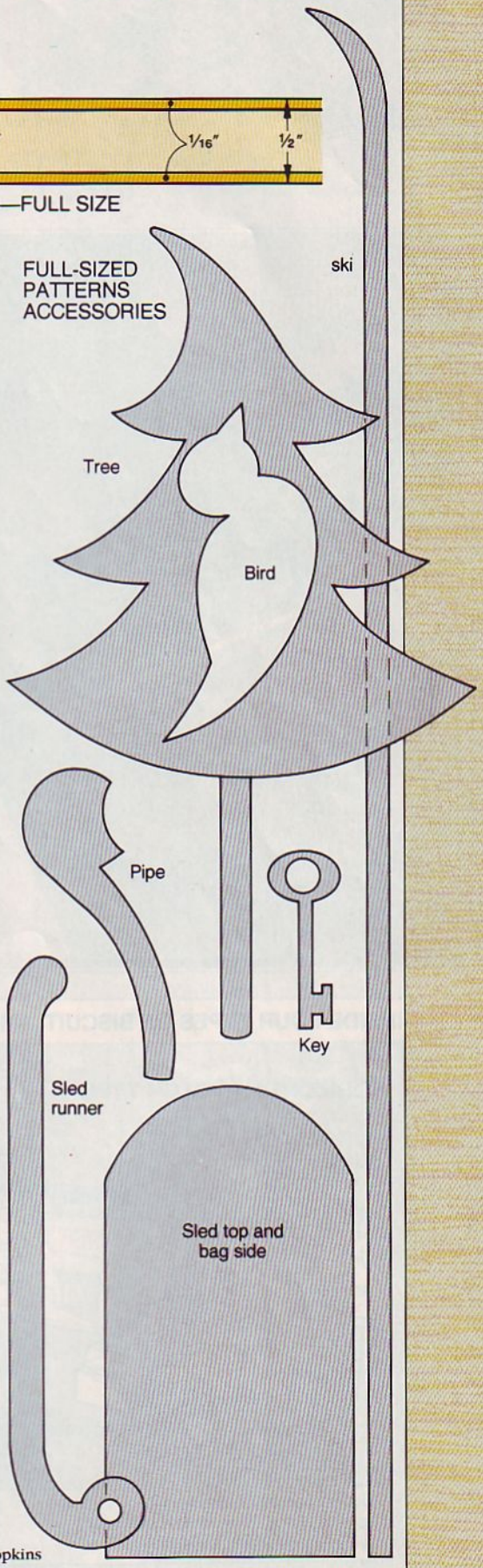

Project Design: Craig Lockwood Illustrations: Mike Henry Photographs: John Hetherington; Wm. Hopkins

BUYING A

HERE'S THE LOWDOWN ON

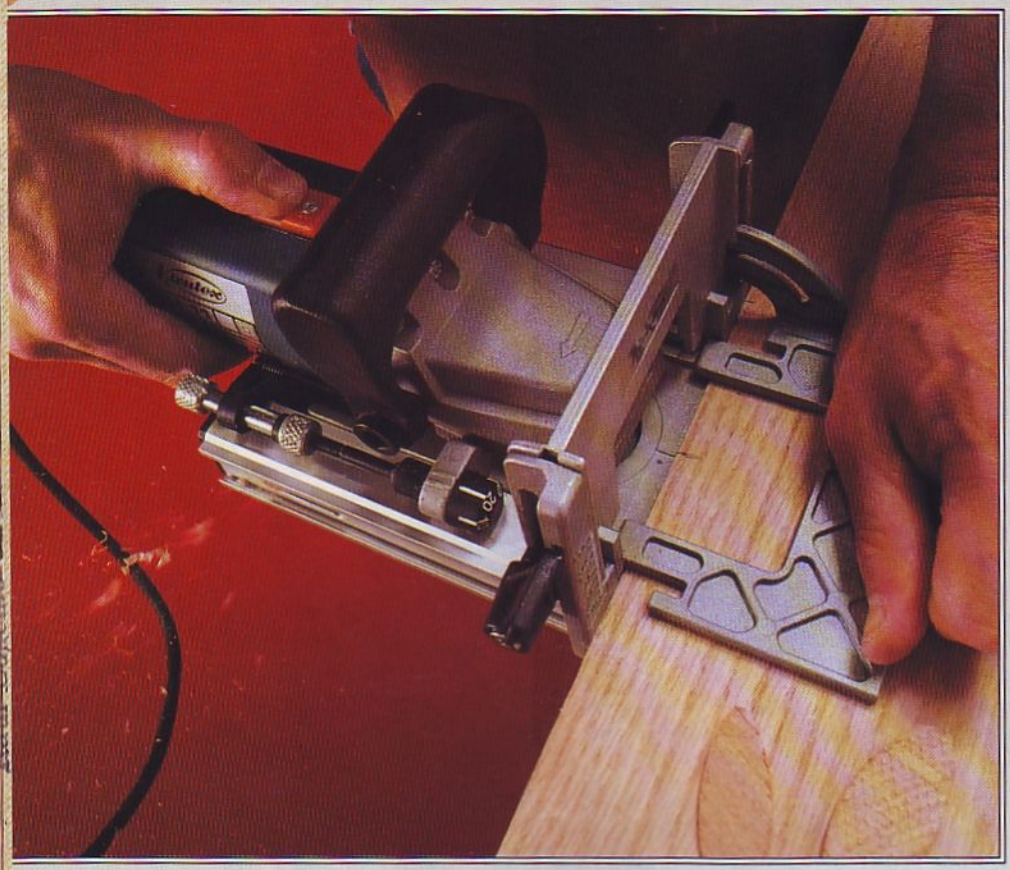

You can pay more than $500, or as little as $125, for a biscuit joiner, and both machines will do the same thing. They'll cut a slot for holding a flat, thin wooden biscuit. So why the big difference in price? Here's what we discovered in our examination of 13 models.

Although manufacturers are always tight-lipped about sales figures, several have told us that they've sold more biscuit joiners, also known as plate joiners, than they imagined possible just a few years ago. And, they tell us, interest in these machines continues to build among home woodworkers for two reasons. First, there's just no quicker way to make a strong and accurate joint. And, new, lower-priced models (under $250) put biscuit joinery within reach of more woodworkers than ever before.

INSIDE FOUR TYPES OF BISCUIT JOINERS

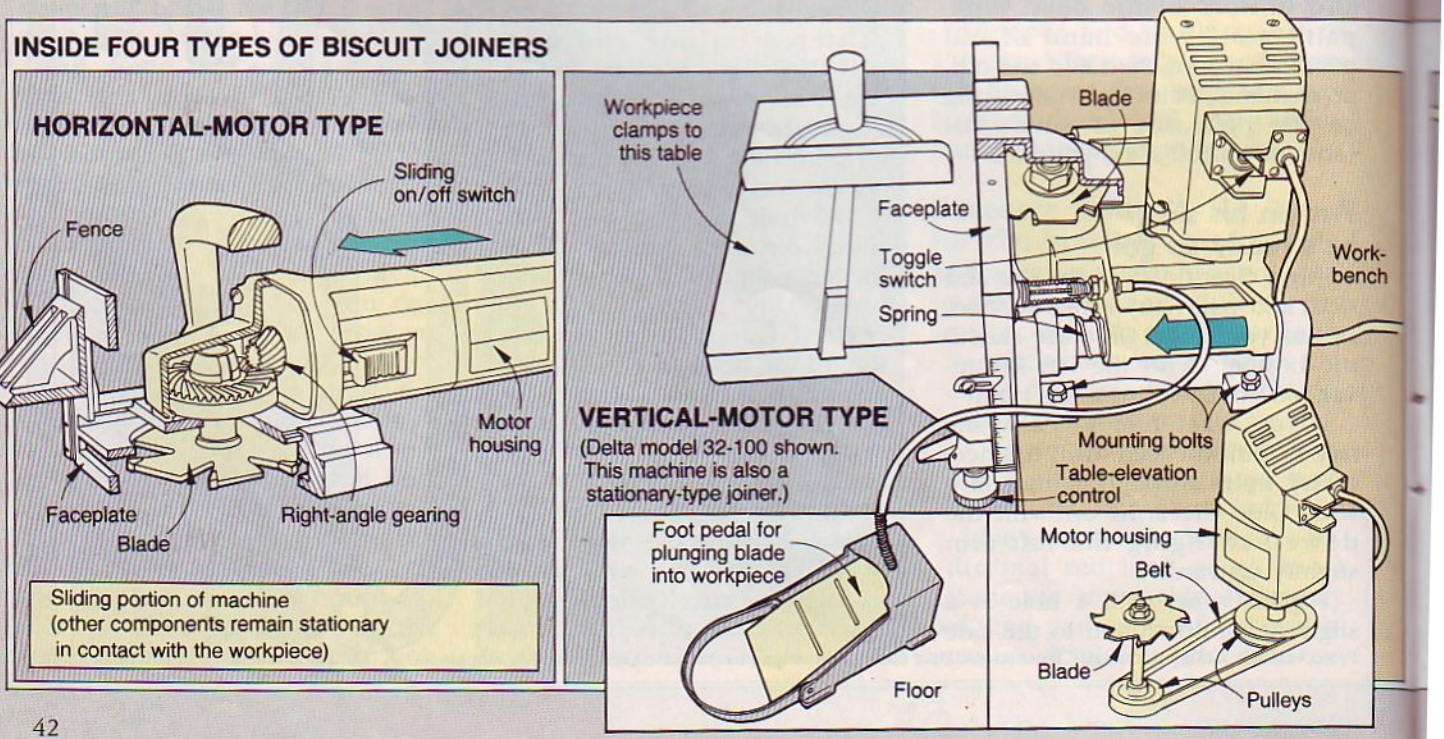

BISCUIT JOINER?

A BAKER'S DOZEN OF THE LATEST MODELS

A decision on which machine to buy depends on how often you intend to use it, and the type of biscuit joints you want to make. As you'll see later, the more-expensive machines have greater versatility, convenience features, and durability. But, if you don't mind putting up with a few inconveniences, you may find that one of the lower-priced machines meets your needs just fine.

Four types of biscuit joiners to choose from

Basically, all biscuit-joining machines work in about the same way. All of them have a faceplate that you put in contact with the wood surface you intend to join. A 4"-diameter blade protrudes from an opening in the faceplate to cut an arced slot. You can adjust the depth of this cut for biscuits of different sizes.

Manufacturers have devised four types of machines for cutting biscuit slots, and each has its own advantages. To help you understand the types, here's an inside look at (see the drawings *below*) and a description of each one:

Horizontal-motor biscuit joiners

You'll find more models of this type, in a greater range of prices, than any other. (See the chart on *page 46* for a listing of machines in this group.) Manufacturers produce these machines with relative ease because the design typically starts with an existing right-angle grinder to which they add a biscuit-joining blade, fence, and faceplate assembly. We found these barrel-shaped grinder bodies easy to grip. Note that we've tinted yellow the portion of the machine that moves when you cut a biscuit slot.

Vertical-motor biscuit joiners

The Delta 32-100, Lamello Cobra, and Porter-Cable 555 have vertically mounted motors (they're the quietest machines we tested). However, their drivetrains differ drastically. The P-C machine has a belt-and-pulley drivetrain that reduces the speed of the blade to 8,000 rpm—not too far from the average speed of about 10,000 rpm for the tested machines. The Delta unit also has a belt-and-pulley system. For more on this machine see "Stationary biscuit joiners" on the *following page*.

Because of its direct drive, the Cobra's blade spins at 18,000 rpm. To compensate for this high speed, the Cobra's blade has only two teeth (instead of the six found on most other machines). This combination produced cuts comparable in quality to the other tested joiners.

The Cobra's handle and switch make it comfortable to operate. We found that the trigger switches on the Cobra and P-C 555 were easier to turn on and off than the sliding switches on most of the other hand-held machines. The D-handle on the P-C joiner proved slightly awkward when we operated the machine at waist height.

Continued

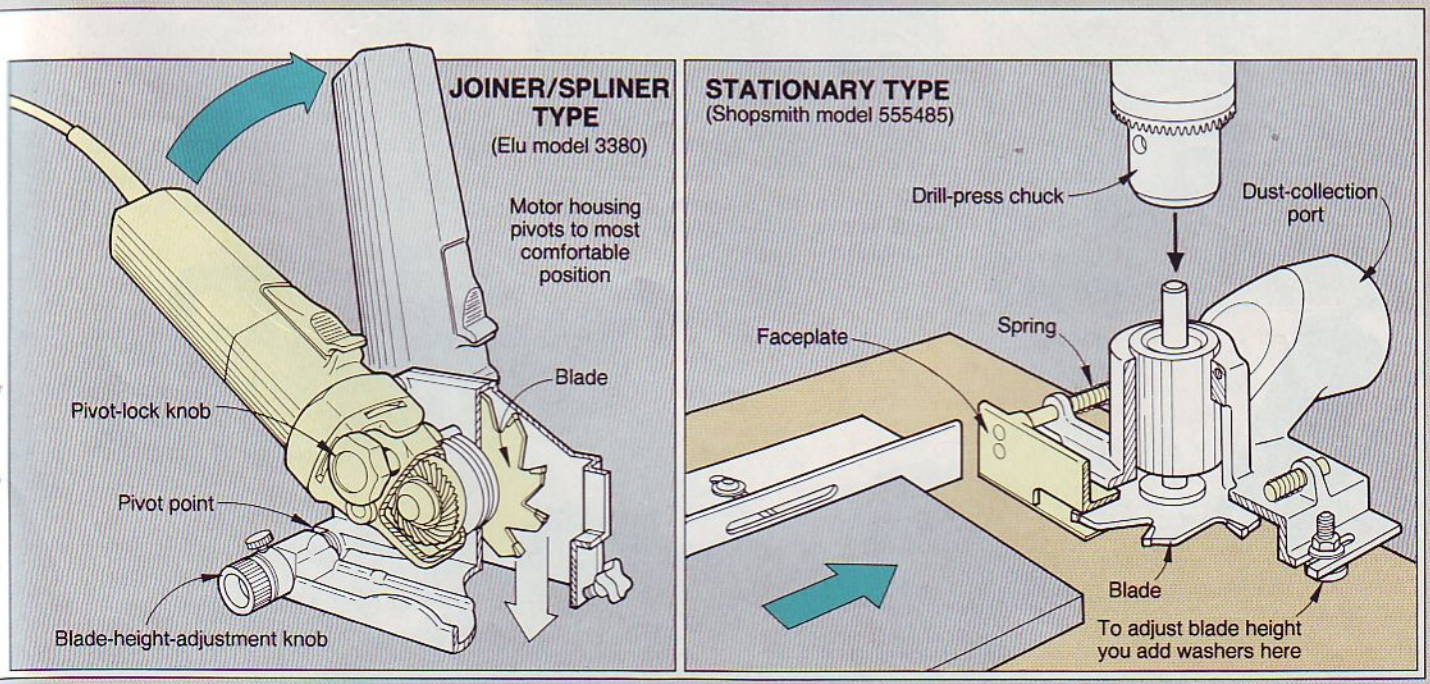

Joiner/spliner

Besides having a blade that *tilts* into workpieces instead of plunging straight in, the Elu 3380 has several features that truly set it apart. First, because of its angled body you can push it along a surface. So, it doubles as a ripping/grooving machine to help you do such things as cut a groove in the edge of a workpiece for a continuous spline.

Unlike the other biscuit joiners, the Elu lets you adjust the height of the blade within the opening in the faceplate. This feature makes fine-positioning of a biscuit slot or spline groove a snap, and allows you to clamp the machine to a benchtop if you want to use it as a stationary joiner.

The depth control on this model also varies from the other units. It has a fine-adjustment knob that you turn to change from one biscuit setting to another, as shown *below*. Although not as fast as the depth-stops found on other machines (see photo *middle*), the fine-adjustment knob allows you to cut at depths in-between the three biscuit depths. You'll appreciate this feature when grooving, trimming, or making cutoffs.

The body of the Elu pivots and locks into position as shown on the *previous page*. This makes the machine comfortable in a greater number of awkward situations.

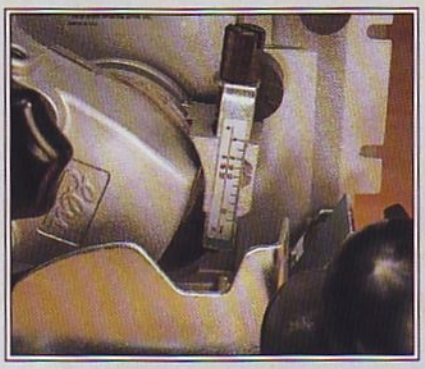

The Elu 3380 has a fully adjustable depth-of-cut scale.

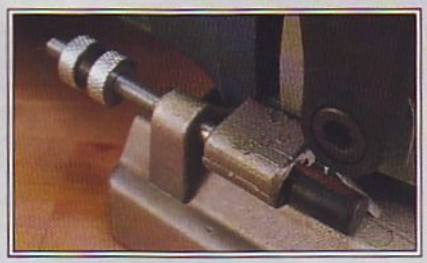

Most biscuit joiners have a three-stop depth setting similar to this one on the Freud JS100.

Stationary biscuit joiners

With both the Delta 32-100 and the Shopsmith biscuit-joiner attachment, you bring workpieces to the biscuit joiner rather than clamping a workpiece to a benchtop as you do with the hand-held joiners. That's where the similarity between these two units ends.

The Delta has a foot pedal that you step on to bring the blade through an opening in the faceplate and into the workpiece. The foot pedal connects to the biscuit joiner via a cable. This setup frees your hands for holding the workpiece steady; there's also a work clamp for securing your stock.

Unlike any other biscuit joiner in our test, the Shopsmith requires you to push the workpiece into the blade, as shown on the *previous page*. This attachment comes in two versions. The basic model works with a Shopsmith Mark V. The same product, called a Universal Biscuit Joiner, has a laminate-covered table and attaches to any drill press.

Good fences make accurate biscuit slots

In addition to depth control, the other adjustment you frequently make on biscuit joiners is the position of the fence. This component adjusts in two ways: 1) up and down for various stock thicknesses, and 2) from 0° to 45° for joining beveled workpieces.

In the chart on *page 46*, we give all of the tested machines a fence rating. Here's what we based those ratings on:

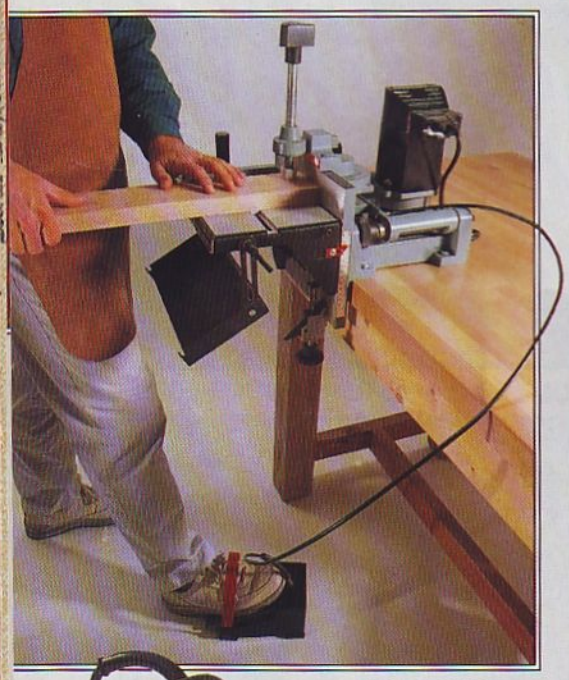

Delta 32-100

• **Convenience.** Manufacturers of better-quality biscuit joiners make fence positioning fast and simple because machines like the Virutex AB-11 *below*, have quick-action levers for locking the fence into any desired position. The lower-priced Skil 1605:02 shown *below, middle*, requires you to use an allen wrench for loosening or tightening the fence.

Of all the machines tested, we found the fence on the DeWalt DW682K the most convenient because of its rack-and-pinion elevation mechanism. This system helps you quickly and accurately raise or lower the fence.

• **Parallelism.** For biscuit slots to line up, they must be cut parallel to the face of the workpiece. To accomplish this feat, you must align the biscuit-joiner fence parallel to the machine's blade. Better-quality joiners have guide systems that automatically align the fence for parallel cuts. The Skil 1605:02 and Porter-Cable 555 require you to manually make this adjustment every time you change the height of the fence.

• **Control.** Most of the tested machines have fences that make it easy to cut biscuit slots into beveled edges. That's because, like the Ryobi JM-100K shown *top right*, their fence and faceplate capture the beveled edge, giving you greater control and accuracy. The fences and faceplates on the Skil 1605:02 and Freud JS100 (shown *middle right*) do not capture the beveled edge, making accurate cuts in dense hardwoods difficult, but possible.

No matter what type of joint you're working on, you need to hold the fence firmly against the workpiece. None of the tested biscuit joiners help you more in this regard than the DeWalt DW682K, Ryobi JM-100K, and Virutex AB-11. The fences on both machines provided a comfortable area for you to apply pressure against as shown in the photo on *page 44*.

• **Adjustability.** You may never need this feature, but some biscuit joiners have fences that angle anywhere between 0° and 45°. This helps you join projects with more than four sides.

Continued

You can change the height and angle of the fence on the Virutex AB-11 in seconds by flipping two levers.

To reposition the fence on the Skil 1605:02 you have to loosen two screws with an allen wrench.

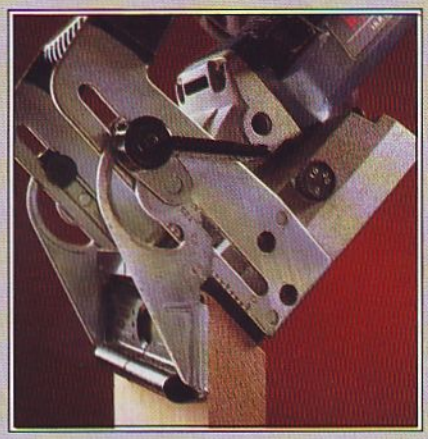

The fence and faceplate of the Ryobi JM-100K capture a beveled edge, giving you greater control and accuracy.

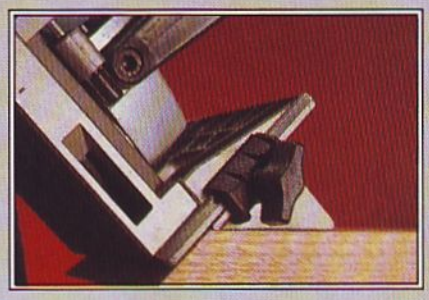

The fences and faceplates of the Skil and Freud (shown here) give you little control when joining beveled edges.

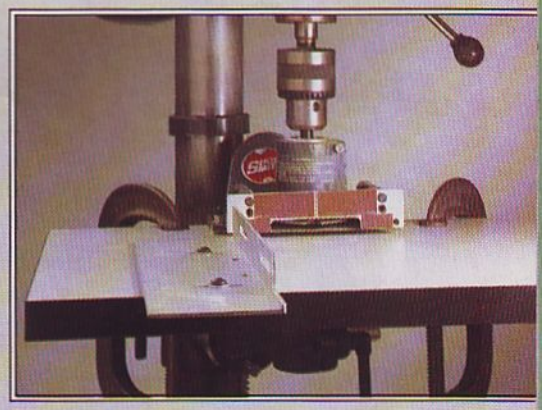

Shopsmith 555485 mounted to a drill press (C-clamps not included)

Blade changes: Some models make it easy

You may only change your biscuit-joiner blade once in a great while, but when you do, you'll appreciate machines that simplify this process. Only two machines—the Lamello Top 10 and Virutex AB-11—earned "excellent" ratings in this category. You can change the blades of both machines in under one minute, and you don't have to remove any parts to do so. The machines that earned "fair" ratings take longer, and have multiple parts such as small faceplate pins, springs, and screws that you must remove and can be easily lost in the changeover process.

Accessories expand the versatility of a biscuit joiner

As you can see in the chart at *right*, you can buy a number of accessories for biscuit joiners. Lamello carries more accessories than any other manufacturer, and many of these items, such as glue applicators, plastic clamping biscuits, solid-surface (Corian, Avonite) biscuits, hinge biscuits and knock-down aluminum biscuits, will work with any machine.

Several of the joiners come with dust bags, but we found that all of them had a tendency to clog with the long, stringy shavings produced when cutting slots in hardwoods. Since biscuit joiners produce lots of shavings, we advise buying a machine with a vacuum attachment if you're concerned about dust collection.

Many of the manufacturers sell their own brand of biscuits. After trying all of them, we rate the Lamello biscuits tops because of consistently uniform thickness from biscuit to biscuit. Our local distributor sells Lamello biscuits for about the same price as other brands, so we think it pays to use Lamello biscuits, even if you can't afford a Lamello joiner.

Gripping points: Choosing pins, plastic, or pads

With the exception of the Skil 1605:02, all portable biscuit joiners have some device on their faceplates for gripping the workpiece. The Skil machine has a ribbed faceplate made of a hard, nylon-reinforced plastic. Although we were able to cut most joints with this model, we had better control with the other units.

The photo *below* shows three basic options in gripping systems: (1) a rubber plate that surrounds the opening, (2) rubber pads in place of the pins, and (3) spring-loaded sharp pins on both sides of the blade opening. All of these systems work well, but we prefer the rubber plate because it makes full contact with narrow workpieces. Of the tested machines, only the Ryobi has such a plate.

MANUFACTURER	MODEL	TYPE (1)	AMPS	DRIVE TRAIN: NO-LOAD SPEED (RPM)	DRIVE TRAIN: DRIVE TYPE (2)
DELTA	32-100	ST, VM	10	10,000	B
DeWALT	DW682K	HM	6.5	10,000	G
ELU	3380	J/S	5	8,500	G
FREUD	JS100	HM	5	10,000	G
LAMELLO	TOP 10	HM	6.4	10,000	G*
	STANDARD 10	HM	5.2	10,000	G*
	COBRA	VM	2.1	18,000	D
PORTER-CABLE	555	VM	5	8,000	B
PRINCECRAFT	BJ-100	HM	6	10,000	G
RYOBI	JM-100K	HM	5.3	9,000	G
SHOPSMITH	555485	ST	MOTOR NOT INCLUDED		D
SKIL	1605:02	HM	6	12,000	G
VIRUTEX	AB-11	HM	5	10,000	G

NOTES:

1. (HM) Horizontal motor (ST) Stationary
   (J/S) Joiner/Spliner (VM) Vertical motor
2. (B) Belt (D) Direct (G) Gear
   (*) Machines have a slip clutch for preventing kickback and extending motor and gear life.
3. (E) English (M) Metric
4. (A) Adjustable (*) Adjustable fence available
   (F) Fixed (0° and 45° only) (#) 0° only
5. (*) Elu machine has a fine-adjustment mechanism with three marks for No. 0, 10, and 20 biscuits.
   (#) Set screws require changing for each change in three biscuit sizes.
6. (BAG) Machine comes with a dust bag
   (VAC) Machine attaches to a vacuum hose
   (*) Requires an accessory attachment for vacuum hose

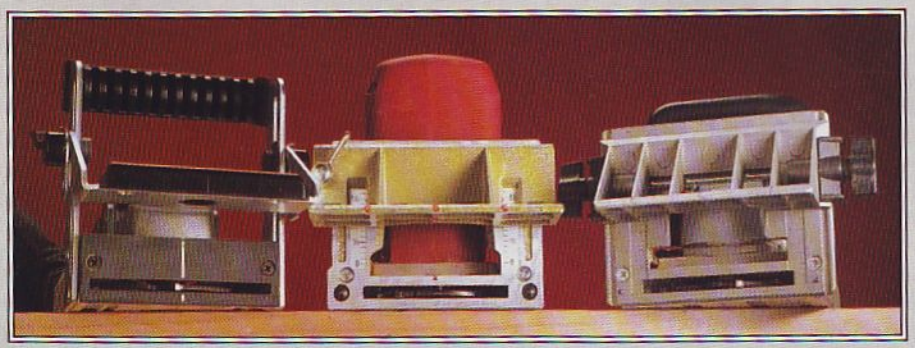

Three gripping options in faceplates *(from left)*: Full rubber plate on Ryobi JM-100K, rubber pads on Lamello Cobra, and pins on Freud JS100.

How the machines performed in our joint-making test

In the chart *above*, we rate the machines according to how well they help you cut the five types of joints described in the biscuit-joiner techniques article on *pages 48–53*. Look for machines that have "excellent" or "good" ratings for the joints you intend to make most often.

A BAKER'S DOZEN OF BISCUIT JOINERS

DRIVE TRAIN		ADJUSTMENTS								ACCESSORIES (8)		JOINT-MAKING EVALUATION (9)						OTHER EVALUATION (9)								PRICE	
DRIVE TYPE (2)		FENCE HEIGHT SCALE (3)	FENCE ANGLE (4)	NUMBER OF DEPTH STOPS (5)	DUST-COLLECTION PORT (6)	BLADE (NO. OF TEETH)	CORD LENGTH (FEET)	SWITCH TYPE (7)	WARRANTY (YEARS)	STANDARD	OPTIONAL	EDGE-TO-EDGE JOINTS	FLAT-BUTT JOINTS	FLAT-MITERED JOINTS	ON-EDGE-MITERED JOINTS	ON-EDGE-BUTT JOINTS	BLADE CHANGING	FENCE	FIT AND FINISH	OVERALL PERFORMANCE RATING (10)	OVERALL VALUE RATING (11)	COUNTRY OF ORIGIN (12)	WEIGHT (POUNDS)	LIST	SELLING (13)
B		E/M	A	3	VAC	6	5 1/2	TO	2		ST	E	E	E	F	*	G	G	G	7	7	T	39.5	$422	$325
G		E	A	3	BAG/VAC	6	8	TR	1	CC, DB, HA		E	E	E	E	E	G	E	G	9	9	U	6.6	350	230
G		NONE	F	*	VAC*	12	10	SL	1	CC	BL, HA, VH	G	G	G	G	G	G	G	G	7	7	SW	6.2	542	260
G		E/M	F	3	NONE	6	8	SL	1	B, CC, O		G	G	G	F	G	F	F	F	6	7	SP	6.2	333	175
G*		E	A	6	VAC	6	9	SL	1	B, CC, O	BJ, BL, DP, GA, HA, HB, KD, LB, PB, SA, SB, SS, VA	E	E	E	E	E	E	E	E	9	7	SW	7	699	560
G*		E	F	6	VAC*	6	9	SL	1	B, CC, O		G	G	G	G	G	F	G	E	7	6	SW	6.6	499	400
D		E	F	6	VAC*	2	10	TR	1	B, CC, O		G	G	G	G	G	F	G	E	7	6	SW	5.5	350	300
B		NONE	F*	3	NONE	6	10	TR	1	CC	AF	G	F	G	F	G	F	F	F	6	6	U	6	299	175
G		E/M	F	3	BAG	6	6	SL	1	CC, DB		G	G	G	F	G	F	F	G	6	7	T	9.9	216	180
G		E	A	3	BAG/VAC	6	6 1/2	SL	1	B, CC, DB		E	E	E	E	E	G	E	G	9	8	J	7.3	431	235
D		NONE	#	#	VAC	6	–	SL	1	B, PB	VH	F	F	F	NR	NR	F	P	F	3	3	U	13	–	160*
G		E	F	3	BAG*	12	8	SL	1	B, CC, DB, HA	GA, PB	G	G	G	P	F	G	F	F	5	6	U	6.6	200	130
G		E/M	A	3	VAC	6	7 1/2	SL	90 days	B, CC, O	VH	E	E	E	E	E	E	E	G	9	8	SP	7.1	363	300

7. (SL) Slide (TO) Toggle (TR) Trigger

8. (AF) Adjustable fence
(B) Small supply of biscuits
(BJ) Biscuit-spacing jig
(BL) Specialty blades
(CC) Carrying case
(DB) Dust bag
(DP) Defect-patching attachment
(GA) Glue applicators
(HA) Hose adapter
(HB) Hinge biscuits
(KD) Knock-down aluminum biscuits
(LB) Large biscuits (3" long)
(O) Oil
(PB) Plastic clamping biscuits
(SA) Stationary attachment
(SB) Small biscuits (1 1/2" long) and special slot cutter
(SS) Solid surface (Corian, Avonite) biscuits
(ST) Stand
(VH) Vacuum hose

9. E Excellent G Good F Fair P Poor
(*) Corner joints possible; most face-to-edge (T) joints not possible
(NR) We do not recommend you attempt to make these joints with this machine.

10. Rated on a 1 to 10 scale based on overall performance.

11. Rated on a 1 to 10 scale based on value to buyer, taking performance and price into consideration.

12. (J) Japan (SP) Spain (SW) Switzerland
(T) Taiwan (U) United States

13. Selling price based on advertisements, catalogs, and dealer inquiries at time of article's writing.
(*) Similar mechanism for use with Shopsmith Mark V sells for $109.

MANUFACTURERS' LISTING

Delta
800/438-2486
412/963-2400

DeWalt
800/433-9258

Elu
(Imported by Black & Decker)
800/762-6672 or
410/527-7000

Freud
919/434-8300

Lamello
(Imported by Colonial Saw)
617/585-4364

Porter-Cable
901/668-8600

Ryobi
800/323-4615
803/226-6511

Shopsmith
800/762-7555

Skil
312/286-7330

Virutex
(Imported by Practical Products)
513/561-6560

Princecraft
800/968-4004

Our recommendations

Beginning with this article, we'll give tested tools a 1-to-10 rating in two categories: overall performance and overall value. The performance rating tells you how the tool stacks up against its competition, regardless of price. The value rating takes performance *and* price into account. We'd like to hear your opinion on this new rating system, so drop us a note at the editorial mailing address shown on *page 1*.

At the conclusion of our testing, the DeWalt DW682K stood out as the overall best value. This brand-new model performed superbly, and has a price tag (about $230) that makes it an excellent value. But, several other machines deserve mention.

As you can see in the chart *above*, the Ryobi and Virutex machines also earned top-notch ratings. And, the Elu should serve you well if you need the advantages of a joiner/spliner machine. For production work, the Delta stationary machine excels.

Although the Freud, Princecraft, and Skil models have their limitations, these machines handle most tasks reasonably well and allow you to get started for less than $200. The Lamello machines seem a little pricey, but you won't find a better-made biscuit joiner.

Written by Bill Krier
Technical consultant: George Granseth
Photographs: Hopkins Associates
Illustrations: Kim Downing, Mike Henry

PROVEN TECHNIQUES FROM THE SHOP TESTED WOOD MAGAZINE SHOP

BISCUIT

THE QUICK, EASY, AND ACCURATE

Looking for a fast and virtually goof-proof alternative to doweled joinery? Maybe it's time you give biscuit joinery a try. In this article, we'll show you how to make seven basic joints with a biscuit joiner. And, we'll share two ways for using your router to do biscuit joinery.

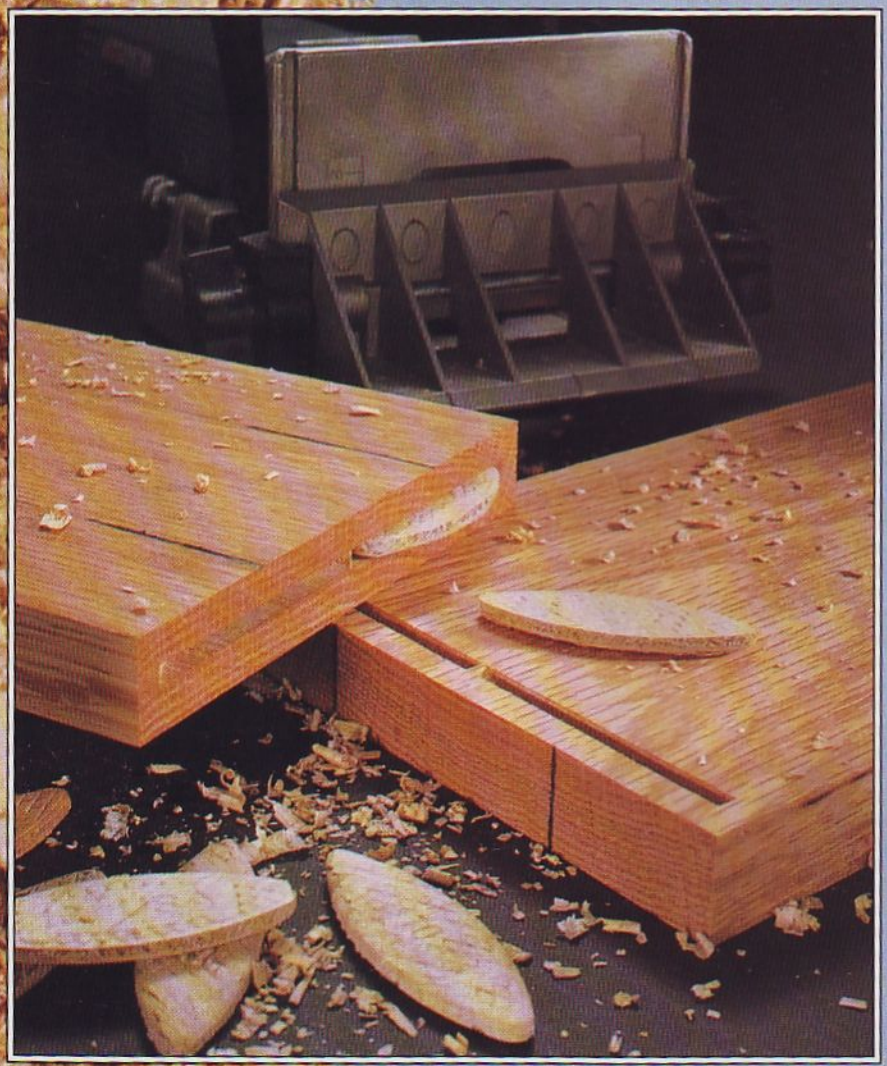

Shortly after going into the furniture-making business in 1944, Swiss craftsman Herman Steiner began looking for a joinery process that was quicker and easier than the traditional methods handed down to him. So, in 1956 he invented the Lamello wood-joining system, in which he used a 4"-diameter circular blade to cut slots in adjoining workpieces. The slots hold thin, football-shaped wafers of compressed wood that swell when they come in contact with glue. Herman knew he was on to something, but it wasn't until the 70s that this new system started catching on in the U.S.

Since then, biscuit joinery (also called plate joinery) has taken off in popularity, helped along by the introduction of lower-priced biscuit joiners in the mid-80s. Today, market analysts estimate that about 125,000 of these machines will be sold in 1992. *(For more information on biscuit joiners, see our Buying Guide that begins on* page *42.)*

Unlike dowel joinery, which requires you to drill precisely positioned holes, biscuit joinery is much more forgiving. As shown in the drawing *below*, biscuits have rounded ends that allow for some side-to-side movement before the glue dries. This means you can be slightly off when cut-

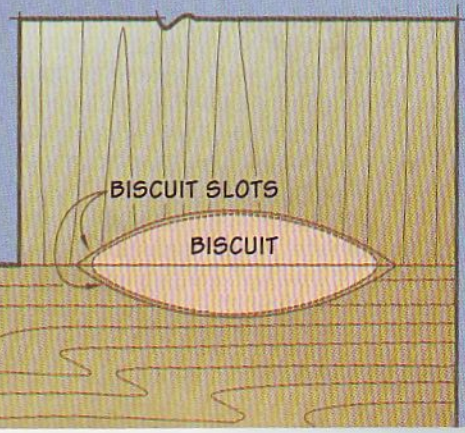

JOINERY BASICS

ALTERNATIVE TO JOINERY WITH DOWELS

ting the slots and still align your workpieces during clamping.

Despite this advantage, biscuit joinery has one limitation. We found that the smallest commonly used biscuit—a 1 13/16"-long no. 0—requires a slot about 2" long. So, you can't use biscuits on workpieces less than about 2⅜" wide. As shown in the drawing at *right*, Lamello has a new biscuit—the H9—that's only 1½" long. This biscuit works with 2"-wide stock, but you must use a special cutter that fits Lamello biscuit joiners. The no. 0, 10, and 20 biscuits will work with any machine.

***Note:** Woodhaven's router-based system helps you biscuit-join stock as narrow as 1½". See page 53 for more information.*

How to get your biscuit joiner up and running

Before getting down to business with a biscuit joiner, you need to make two simple adjustments. First, depending on the model you own, you need to adjust the height of the machine's fence or blade so it cuts a slot centered on the thickness of your workpiece.

Since biscuits measure about ⅛" thick, you can safely join stock as thin as ⅜". When joining thick stock (6/4 and thicker), you should use two biscuits equally spaced between each other and the stock faces.

Next, you need to adjust the biscuit joiner's depth of cut. To do this, position the machine's depth adjuster for a no. 10 biscuit (it also has positions for no. 0 and no. 20 biscuits). Since a no. 10 biscuit measures ¾" wide, you should fine-tune the adjuster so the blade protrudes about 13/32" from the faceplate of the biscuit joiner. We arrived at this figure by dividing in half the width of the biscuit (result, ⅜") and adding 1/32" so the biscuit fits with a little room to spare.

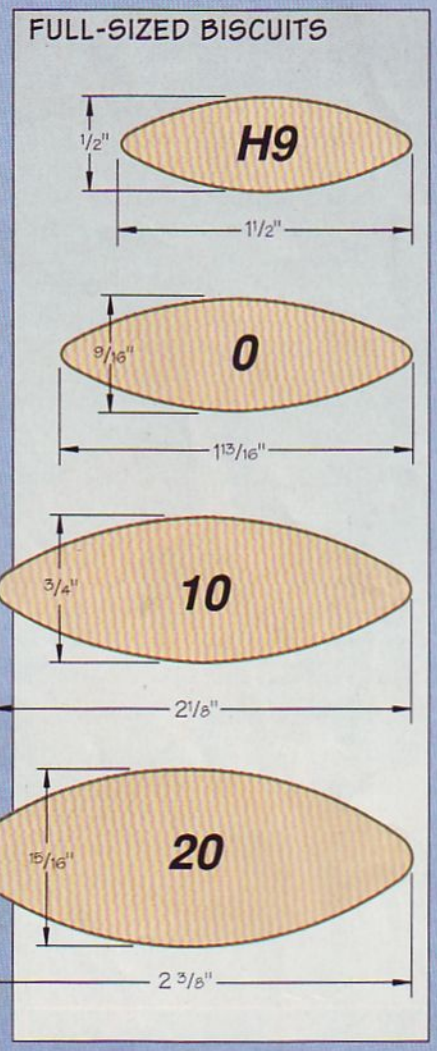

To test this adjustment, clamp a piece of scrap stock to your bench, make a cut, and insert a no. 10 biscuit fully into the slot. Mark a line across the biscuit as shown *above, top*. Remove the biscuit, flip it end-for-end, and reinsert it into the slot. The marked line should be hidden by the workpiece. Now, mark a second line, remove the biscuit, and measure the distance between the two lines as shown *above*. This distance should measure about 1/16".

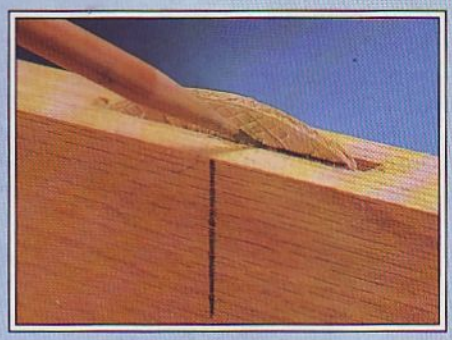

To determine if you have cut the slot deep enough, insert the biscuit and mark a line along the length of the biscuit as shown at *top*. Flip the biscuit end for end, and reinsert it. The first line should disappear. Then, mark a second line. The two lines should be about 1/16" apart as shown at *bottom*.

Once you adjust your biscuit joiner for no. 10 biscuits, the machine should be automatically adjusted for no. 0 and no. 20 biscuits. Nevertheless, it's a good idea to test all your cuts in scrap stock when switching from one biscuit size to another.

Continued

HOW TO MAKE SEVEN BASIC JOINTS

For most projects, you'll use one of the following joints. We've found biscuits suitable for cabinet and furniture construction, but for heavily stressed joints, such as one connecting a table leg to a rail, we'll stick with mortise-and-tenon joinery.

EDGE-TO-EDGE JOINTS

Biscuits have two beneficial effects on edge-joined boards. First, they reinforce the joint, helping prevent splits along the joint line. And second, they help you align the boards during assembly.

To begin edge-joining boards with biscuits, you must joint the boards, lay them on a work surface, and position them for the best grain and color match. Clamp the boards to keep them from sliding during the next step.

Mark the position of the biscuits by penciling lines across the joints as shown *below left*. Mark the lines no farther than 8" apart and no more than 4" in from the ends of the boards. Before you disassemble the boards, mark a large V on their surface to help you reassemble them later.

Now, clamp each board to the edge of your workbench, align your workpiece marks with the mark on the biscuit joiner as shown *below right*, and cut the biscuit-holding slots. Apply glue to the biscuits, board edges, and slots. Then, clamp the workpieces and allow the glue to dry.

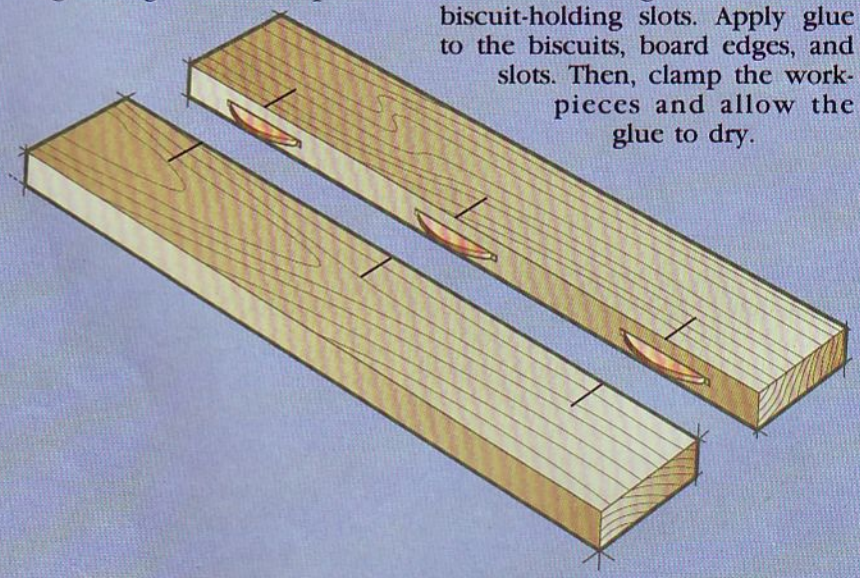

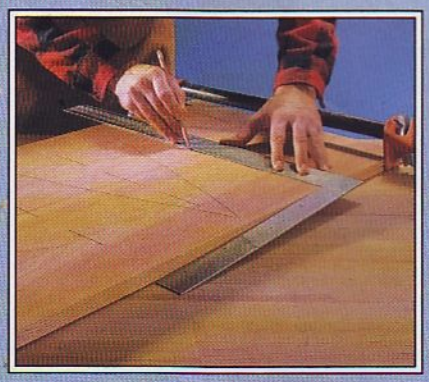

A framing square helps you accurately mark the biscuit positions along the joint lines of a dry-clamped panel.

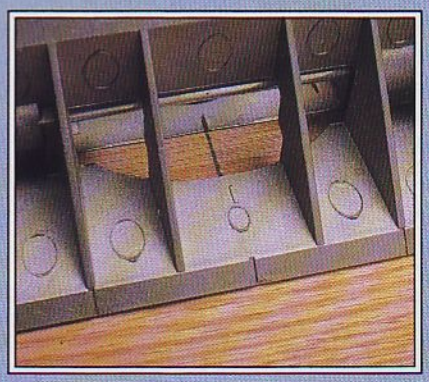

To cut a slot, first align the biscuit joiner's mark with the mark on your workpiece. Then, plunge in the blade.

A few tips to ensure biscuit-joinery success

Although these machines make your joining tasks surprisingly easy, a few common mistakes can really trip you up. The following pointers will help you get the best possible results.

- Always keep the face side of your workpieces up when using a handheld biscuit joiner. With table-mounted biscuit joiners or routers, the face side should be down. This way, the face sides always will align flush.
- Before plunging your biscuit joiner's blade into a workpiece, do the following. Press the biscuit joiner against the workpiece with enough force so that both the faceplate and fence make complete contact with the workpiece. Most biscuit joiners have small workpiece-gripping pins or rubber pads on their faceplates that may prevent full contact if you don't press hard enough.
- Whenever possible, clamp your workpieces to a work surface. This helps you maintain control over the biscuit joiner and workpieces.
- Before applying white or yellow woodworker's glue, dry-fit and clamp your workpieces. This will spare you a lot of headaches in the event that you miscut a slot.
- Use a small brush to spread glue evenly on the biscuits, all mating surfaces, and inside the slots.
- Biscuits will swell if exposed to damp air, making them too thick to fit into their slots. So, store them in air-tight containers such as resealable plastic bags. You can shrink the biscuits by zapping them in a microwave for a few seconds, but this may weaken them.

FLAT BUTT JOINTS (CORNER AND T)

To join a rail to a stile, you simply mark the position of the biscuits and cut the slot in the stile as described for edge-to-edge joints. However, cutting the slot in the rail requires a slightly different approach. Since the faceplate pins or rubber pads on some biscuit joiners will not make contact with rails less than 5" wide, you need to clamp a stopblock alongside the rail as shown in the photo *below*. The stopblock provides a gripping surface for one pin or pad (you'll want to clamp the block to the right side of the workpiece). Make the stopblock at least 1' long, and thinner than the rail so it doesn't interfere with the biscuit joiner's fence.

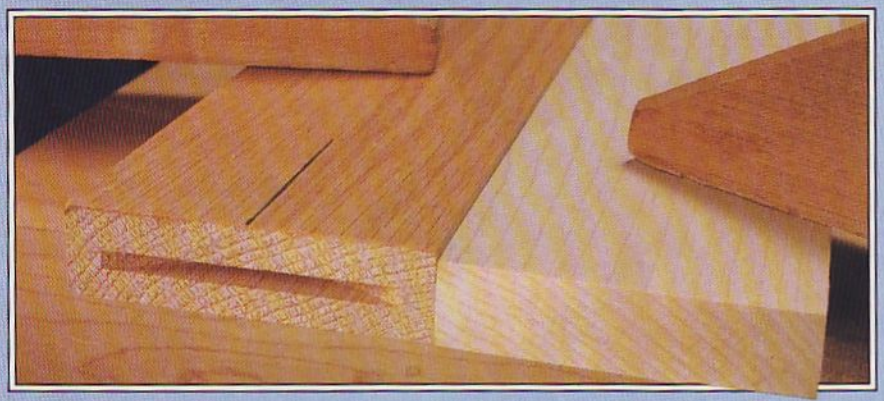

A stopblock (at *right*) provides a gripping surface for one of the pins on the faceplate of a biscuit joiner. The stopblock should be slightly thinner than the workpiece.

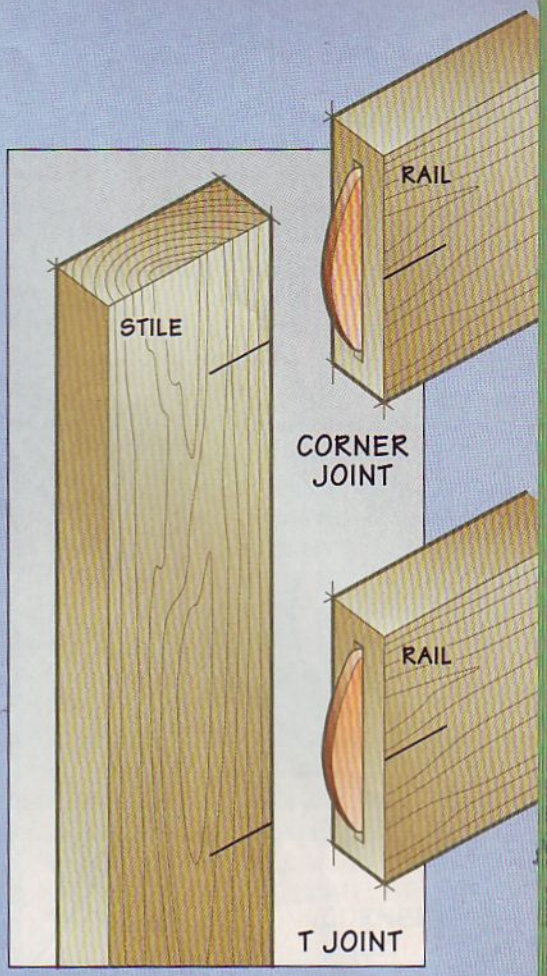

FLAT MITERED JOINTS

Doweling a mitered joint can be difficult at best, but biscuit joiners make this task a snap. First, mark a line midway along the joint. Then, clamp the workpieces to a benchtop as shown *below*. Make a right-angle jig from a square scrap of wood or plywood slightly thinner than the workpieces. This jig and a straightedge help you position the mitered ends straight and flush. Aligned this way, each workpiece provides a contact surface for one of the biscuit-joiner pins or pads while you cut a slot in the other workpiece.

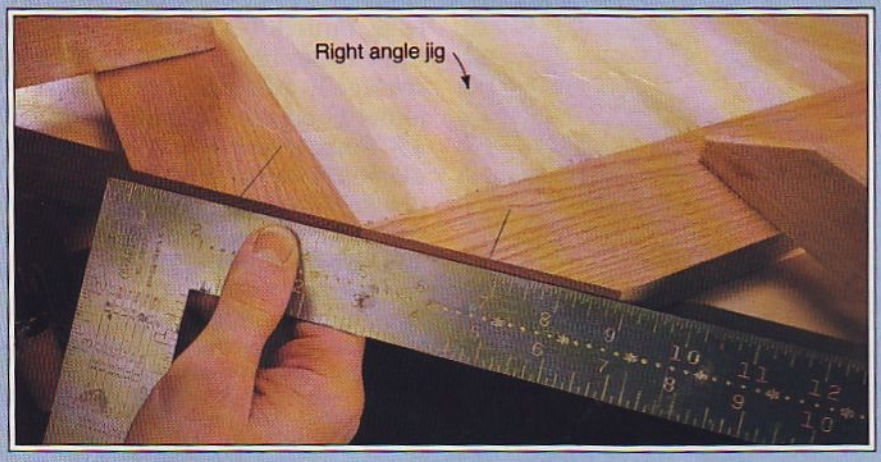

A straightedge and scrap of wood or plywood cut at 90° help you align and clamp the ends of workpieces mitered at 45°.

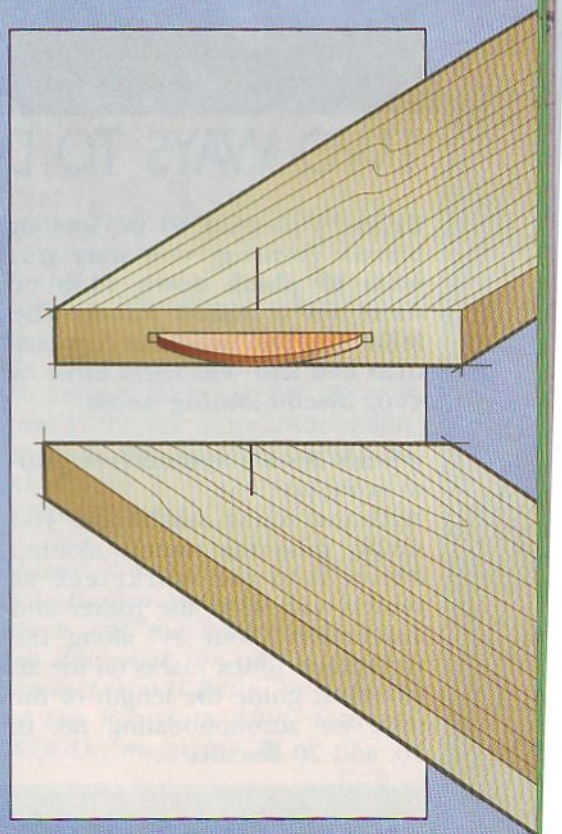

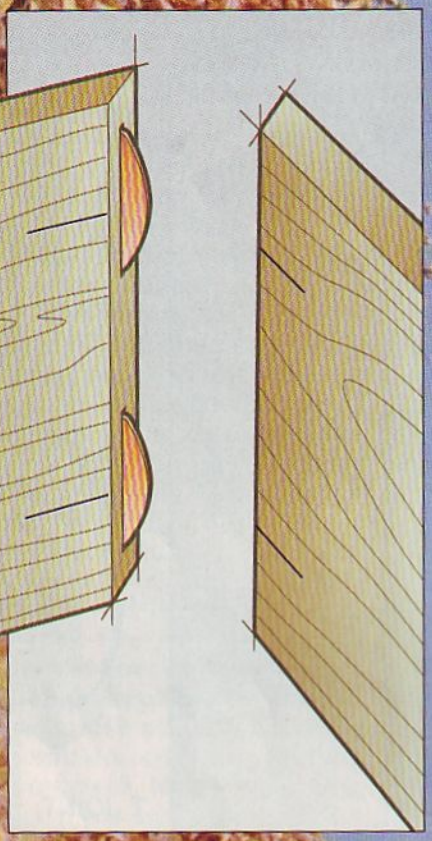

ON-EDGE MITERED JOINTS

To make this joint, disregard the general rule about having the face side up. As shown in the photo *below left*, you need to mark the position of the biscuits on the inside surfaces of the joint. Before cutting the slot, make certain the fence and faceplate make full contact with the workpiece as shown *below right*.

All biscuit joiners perform this task well with plywood or solid woods of soft or medium density. But, we found that with dense woods, such as hard maple, the pins on most biscuit joiners don't sufficiently grip the wood, which can result in a misaligned joint. If you plan to make this joint with dense wood, we suggest you use the DeWalt, Elu, Lamello, Porter-Cable, Ryobi, or Virutex biscuit joiners. These machines have fence assemblies that capture the workpiece and minimize any chances of misalignment.

Unlike most joints, you need to mark the biscuit positions on the *inside* surfaces of an on-edge mitered joint.

For proper alignment, make certain the fence and faceplate make complete contact with the workpiece.

TWO WAYS TO DO BISCUIT JOINERY WITH A ROUTER

Unless you plan to do lots of biscuit joining, you may not want to plunk down $130 or more for a biscuit joiner. The following two products cost less than $60 and will meet most of your biscuit-joining needs.

• Sears Bis-Kit System (see photo at *right*)

With this router attachment, you simply push the router's slotting cutter into the workpiece as shown, and slide the router and attachment about ¾" along the workpiece. Index marks on the attachment guide the length of the slide for accommodating no. 0, 10, and 20 biscuits.

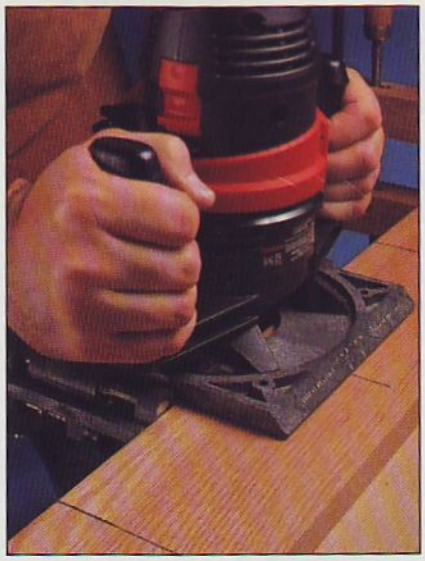

This $50 accessory helps you dabble in basic biscuit joinery, but it does have limitations. The attachment doesn't work with on-edge butted T joints (because it can't make cuts in the field of a surface), and on-edge mitered joints (because it doesn't have a 45° fence). Any router with a 6"-diameter round base will fit this device, but with non-Sears routers you have to drill and countersink your own mounting holes.

To cut a slot with the Sears Bis-Kit System, you plunge the router's slotting cutter into the workpiece and slide the router assembly about ¾" along the edge of the workpiece. The accessory comes predrilled for Sears routers.

ON-EDGE BUTT JOINTS (CORNER AND T)

Biscuit joiners will help you quickly assemble carcases and shelving units. You just need to follow this three-step marking-and-slotting process.

First, lay the horizontal workpiece (such as a carcase top, bottom, or shelf) on top of the vertical workpiece (carcase side). Align the edges flush, and position the horizontal piece so that if you tipped it up it would be in its assembled location. Clamp the workpieces as shown *below left*, and mark the locations of the biscuits on the horizontal workpiece.

Now, remove your biscuit joiner's fence, or flip it up and out of the way, and cut slots into the horizontal workpiece. To cut mating slots into the vertical workpiece, align the mark on the horizontal workpiece with the index mark on the bottom of the biscuit joiner as shown in the photo *below right*.

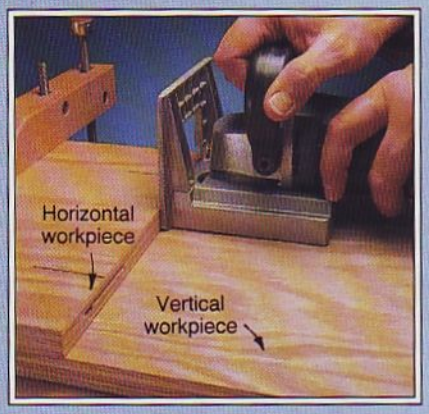

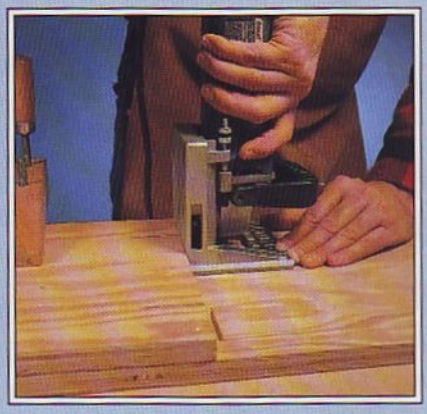

After cutting the slots in the horizontal workpiece as shown at *left*, turn the biscuit joiner onto its faceplate. Then, align the marks on the horizontal workpiece with the index mark on the baseplate of the biscuit joiner, and cut the slots into the vertical workpiece as shown at *right*.

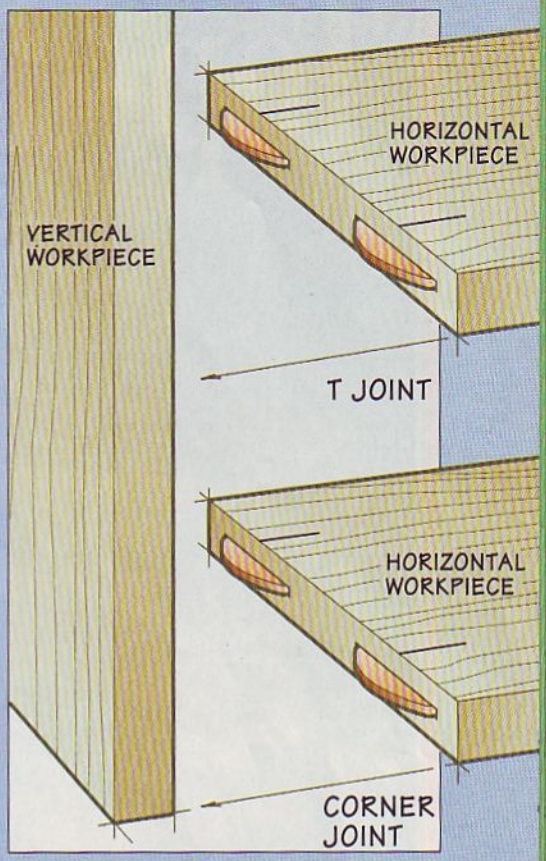

• Woodhaven's Biscuits and Bits

With this product, you also use a slotting cutter to make the biscuit-holding slot. But, the manufacturer sells special biscuits that save you the effort of sliding the cutter through the workpiece after you make the plunge cut. As you can see at *right*, Woodhaven's 1¼"-long biscuits are rounder than standard biscuits, so they fit neatly into the mortise produced by the 1½"-diameter, ¼"-kerf slotting cutter included with every kit.

This package also contains a straight bit for making field cuts, but requires you to build a jig to produce on-edge miter joints. We find this system especially useful with a table-mounted router, and a true blessing for face frames between 1½" and 2" wide. The basic kit costs $59.99 and contains the two router bits shown in the photo, 100 biscuits, and 10' of spline. Additional packs of 100 biscuits cost $7.99. For more information, contact Woodhaven, 5323 W. Kimberly Rd., Davenport, IA 52806. Call 800/344-6657.

At the heart of Woodhaven's Biscuits and Bits system: a slotting cutter and straight bit for cutting slots for the unique ¼"-thick, 1¼"-long, and 15/16"-wide biscuits.

***Note:** If you plan to buy the Woodhaven system, be sure to check out the router-table fence we designed for use with this product. You'll find it on* page 38 *of the February 1990 issue of* WOOD® *magazine.*

Written by Bill Krier Technical consultant: Chuck Hedlund Photography: Hopkins Associates Illustrations: Kim Downing

Top-drawer desk set

With that pin-striped executive look

Customize your office or home desktop in style with this handsome trio of helpful accessories. We sandwiched thin layers of maple between pieces of walnut to create the snappy business look seen on all three projects.

Note: *You'll need thin stock for this project. You can either resaw or plane thicker stock to the thicknesses listed in the Bill of Materials. Or, see our source of pre-planed stock in the Buying Guide at the end of the article.*

For starters, form the maple and walnut lamination

1 Cut two pieces of ½"-thick walnut and one piece of ½"-thick maple to 3⅞" wide by 48" long.

2 Apply a thin, even coat of woodworker's glue to the mating surfaces. With the edges and ends flush, glue and clamp the pieces face-to-face in the configuration shown in Step 1 of the five-step drawing on the *opposite* page.

3 Remove the clamps from the lamination, scrape the glue from one edge, and joint or plane that edge flat. Now, rip the *opposite* edge for a 3¾" finished width.

4 Referring to Step 2 of the five-step drawing, center the blade on the lamination, and make two cuts where shown to resaw the lamination in two. (We used a thin-kerfed carbide-tipped blade.)

5 Joint or plane the ripped surface of the maple shown in Step 3

Text continues on page 56

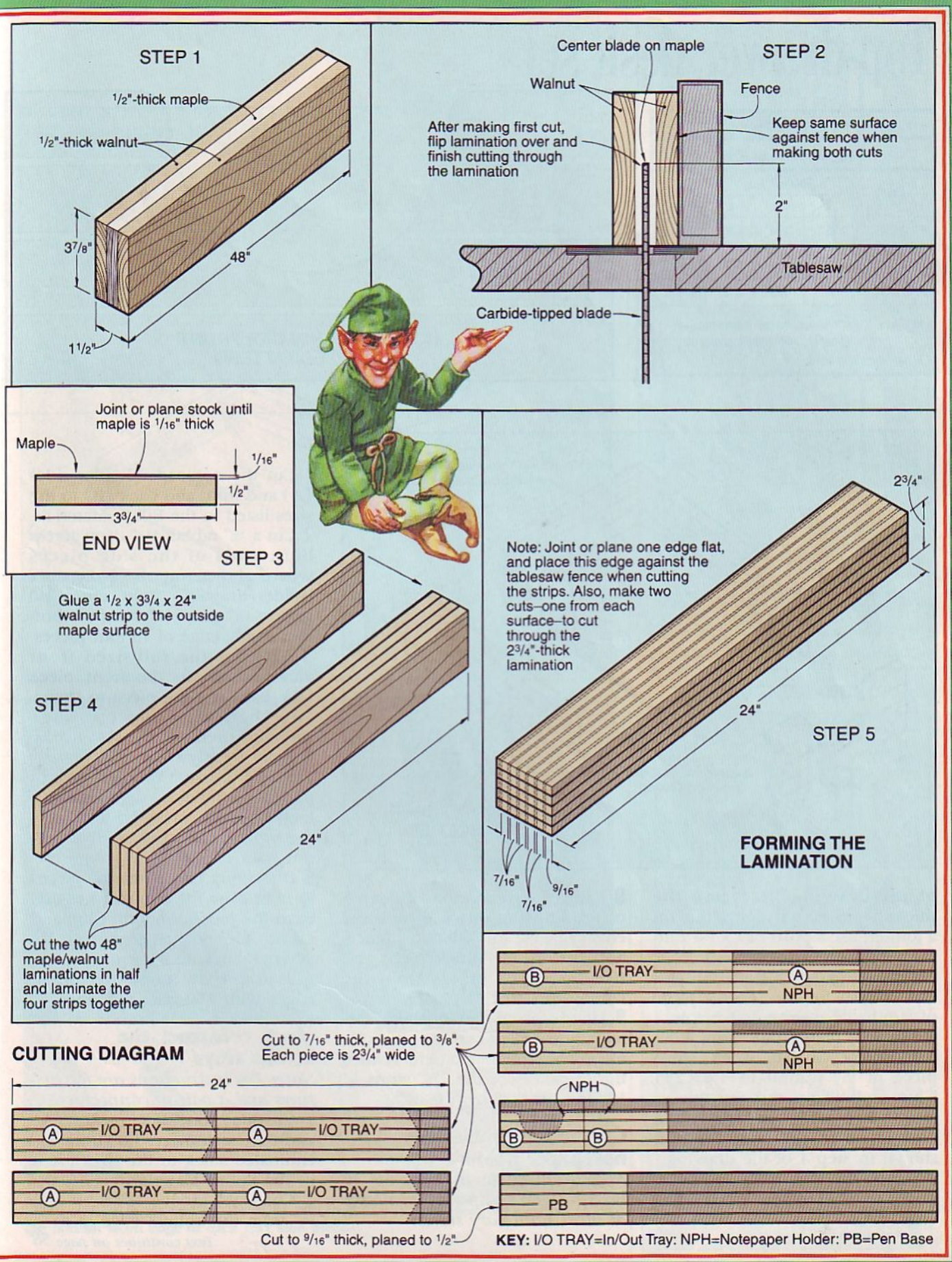
STEP 1
1/2"-thick maple
1/2"-thick walnut
3 7/8"
48"
1 1/2"
STEP 2
Center blade on maple
Walnut
Fence
After making first cut, flip lamination over and finish cutting through the lamination
Keep same surface against fence when making both cuts
2"
Tablesaw
Carbide-tipped blade
Joint or plane stock until maple is 1/16" thick
Maple
1/16"
1/2"
3 3/4"
END VIEW
STEP 3
Glue a 1/2 x 3 3/4 x 24" walnut strip to the outside maple surface
STEP 4
24"
Cut the two 48" maple/walnut laminations in half and laminate the four strips together
Note: Joint or plane one edge flat, and place this edge against the tablesaw fence when cutting the strips. Also, make two cuts–one from each surface–to cut through the 2 3/4"-thick lamination
2 3/4"
24"
STEP 5
7/16"
7/16"
9/16"
FORMING THE LAMINATION
CUTTING DIAGRAM
Cut to 7/16" thick, planed to 3/8". Each piece is 2 3/4" wide
24"
A I/O TRAY
A I/O TRAY
A I/O TRAY
A I/O TRAY
B I/O TRAY
A NPH
B I/O TRAY
A NPH
NPH
B
B
PB
Cut to 9/16" thick, planed to 1/2"
KEY: I/O TRAY=In/Out Tray: NPH=Notepaper Holder: PB=Pen Base

Top-drawer desk set

NOTEPAPER HOLDER

Bill of Materials

Part	Finished Size T	W	L	Matl.	Qty.
A sides	3/8"	2 3/16"	7"	WM	2
B front & back	3/8"	2 3/16"	4 5/8"	WM	2
C bottom	1/4"	4 1/2"	6 1/2"	WP	1

Material Key: WM–laminated walnut and maple, WP–walnut plywood.
Supplies: clear finish.

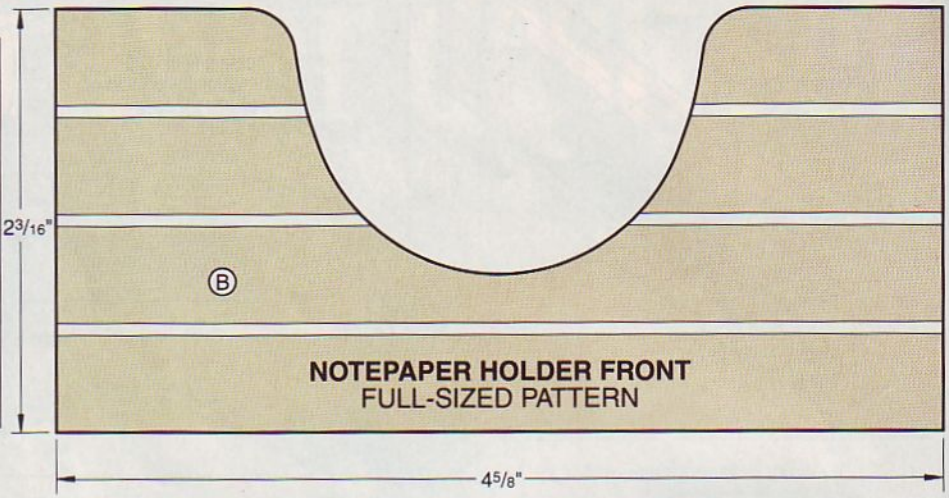

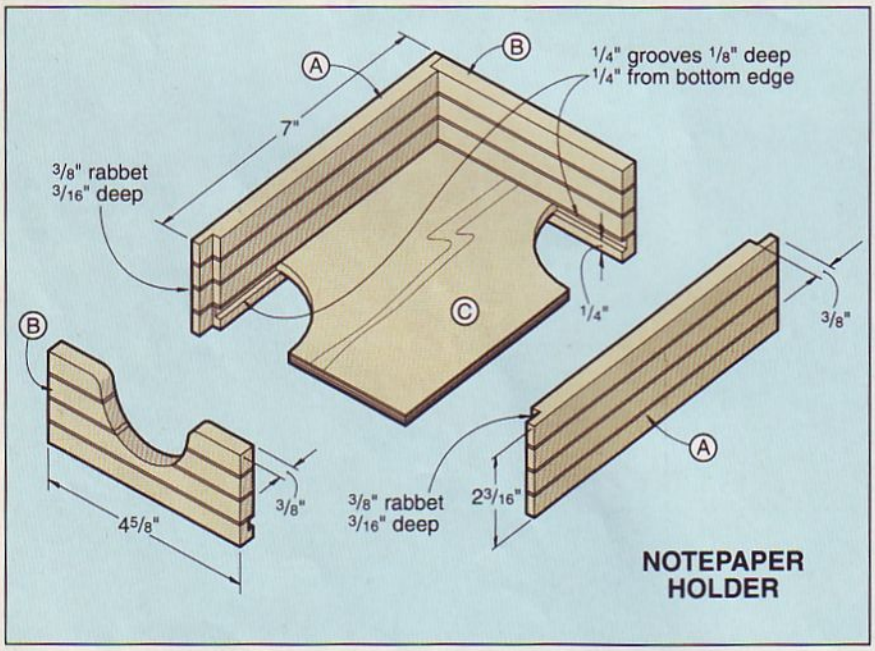

of the drawing. Decrease the thickness to 1/16". If doing this on a jointer, use a push block for uniform pressure and to keep your fingers safely away from the cutters. Repeat for the second piece of laminated walnut and maple.

6 Crosscut the two 48"-long laminated pieces in half. Then, cut a piece of 1/2" walnut to 3 3/4 × 24". Glue and clamp the five pieces face-to-face with the edges and ends flush in the configuration shown in Step 4 of the drawing.

7 Scrape the glue from one edge. Then, joint or plane the scraped edge flat.

8 Using the dimensions in Step 5 of the drawing, place the planed edge against the tablesaw fence, and rip one 9/16"-thick piece and five 7/16"-thick pieces from the laminated block.

9 Lightly plane or sand both surfaces of each laminated strip to remove the saw marks and reduce the thickness of the 7/16" strips to 3/8" and the 9/16" strip to 1/2".

Cut and assemble the notepaper holder

Note: *Our holder is designed to house 4×6" notepaper, available at most stationary stores.*

1 Cut the notepaper holder sides (A) and front and back (B) to the sizes listed in the Bill of Materials.

2 Cut a 3/8" rabbet 3/16" deep across both ends of the side pieces where shown on the Notepaper Holder drawing. Then, cut a 1/4" groove 1/8" deep, 1/4" from the bottom inside edge of all four pieces.

3 Transfer the full-sized front view pattern to the front piece (B). Bandsaw the piece to shape, and then sand the cut edge smooth to remove the saw marks.

4 From 1/4" plywood, cut the bottom (C) to size. (We used walnut plywood; you also could choose a less-expensive plywood and stain the top exposed face with a walnut stain.)

5 Dry-clamp (no glue) the pieces to check the fit; trim if necessary. Sand the pieces smooth. Glue and clamp the notepaper holder together, checking for square.

6 Sand a slight round-over on all edges with 150-grit sandpaper.

Next, construct the in/out trays

Note: *The instructions are for two trays and a pair of connectors.*

1 Crosscut four side pieces (A) and two back pieces (B) from the laminated stock to the sizes listed in the Bill of Materials .

2 Cut a 1/4" groove 1/8" deep and 1/4" from the bottom edge in each

Text continues on page 58

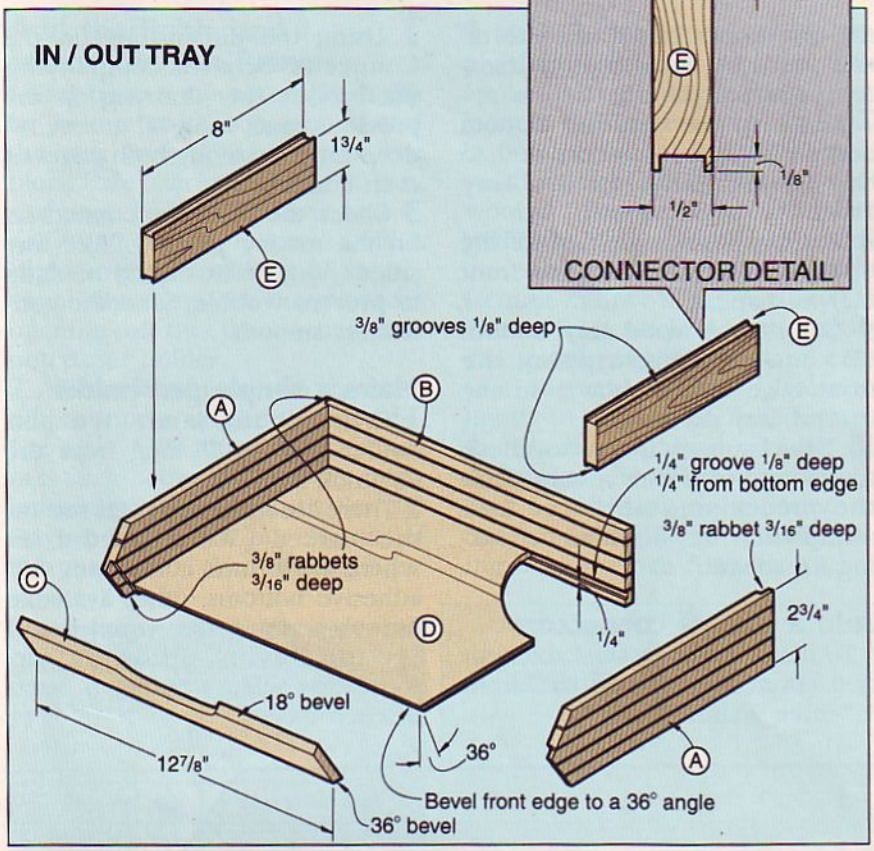

Using a miter gauge and a dado blade mounted to your tablesaw, cut a rabbet along the bottom front edge of each tray side piece.

CUTTING THE MITERS

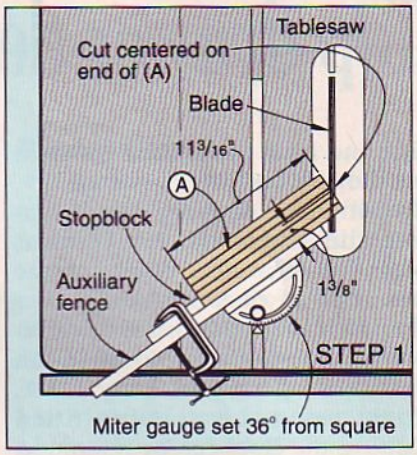

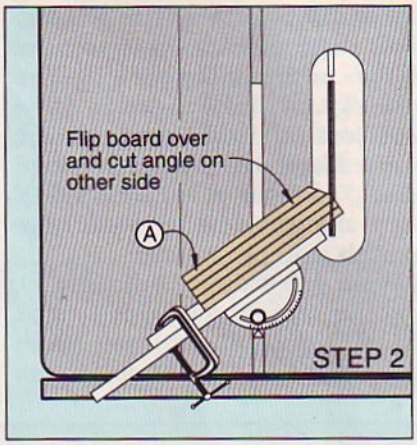

CUTTING THE RABBETS

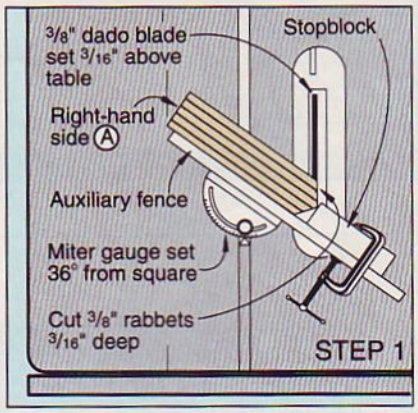

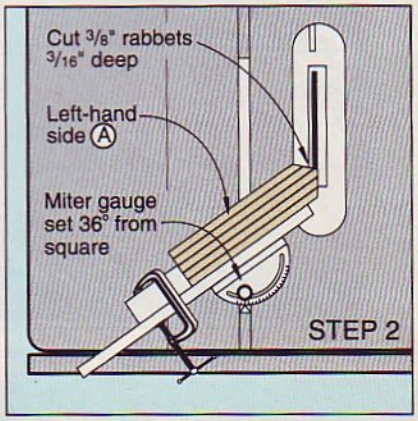

Top-drawer desk set

side and back piece where shown on the In/Out Tray drawing.

3 Using the drawing titled Cutting the Miters on the previous page for reference, miter-cut the front end of each side piece.

4 Switch to a dado blade, and readjust the stopblock location on your miter-gauge auxiliary fence. Then, using the drawing titled Cutting the Rabbets for reference, cut a rabbet along the bottom front edge of each side piece as shown in the photo on the *previous page.*

5 Adjust the miter gauge square to the blade, reposition the stopblock, and cut a ⅜" rabbet ³⁄₁₆" deep along the back inside edge of each side piece.

6 From ⅜" walnut (solid stock), cut the tray fronts (C) to size. Transfer the full-sized tray front half-pattern to the inside face of the tray fronts. You'll need to do this twice on each front to transfer the entire pattern.

7 Bevel-rip the top and bottom edges of the front pieces (C) to the angles stated on the Tray Front End View pattern.

8 Bandsaw, and then sand the opening in each walnut tray front (C) to shape.

9 Cut the plywood tray bottom (D) to size, bevel-ripping the front edge where shown on the In/Out Tray drawing.

10 Dry-clamp each tray to check the fit, and trim if necessary. Sand the pieces smooth. Glue and clamp each tray together, checking for square.

Add a pair of connectors

1 To make the trays stackable, cut two connectors (E) to size from ½"-thick walnut.

2 Using the dimensions on the Connector detail accompanying the In/Out Tray drawing on the previous page, cut a ⅜" groove ⅛" deep centered along both edges of each connector.

3 Check the fit of the connectors on the mating pieces of the tray sides (A). The fit should be snug to prevent wobble. Sand the connectors smooth.

Make a simple pen holder

1 Crosscut the laminated pen holder base to 7" long from the ½"-thick lamination.

2 There are numerous pen sets on the market. (We selected a set where the funnels come with self-adhesive bottoms; other available funnels screw to the wood base.) See the Buying Guide for our source, or select your own. Sand the pen base.

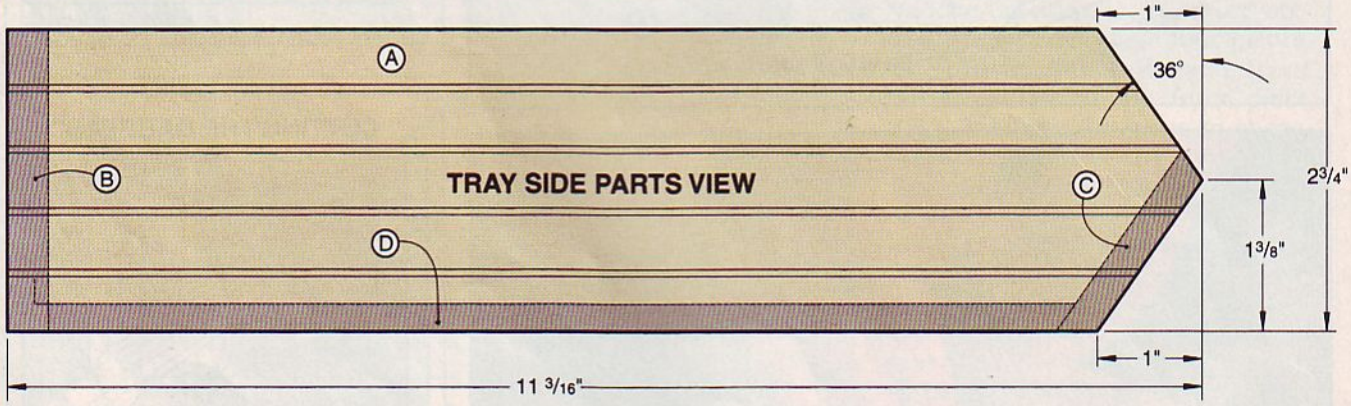

FRONT VIEW (FULL-SIZED PATTERN)

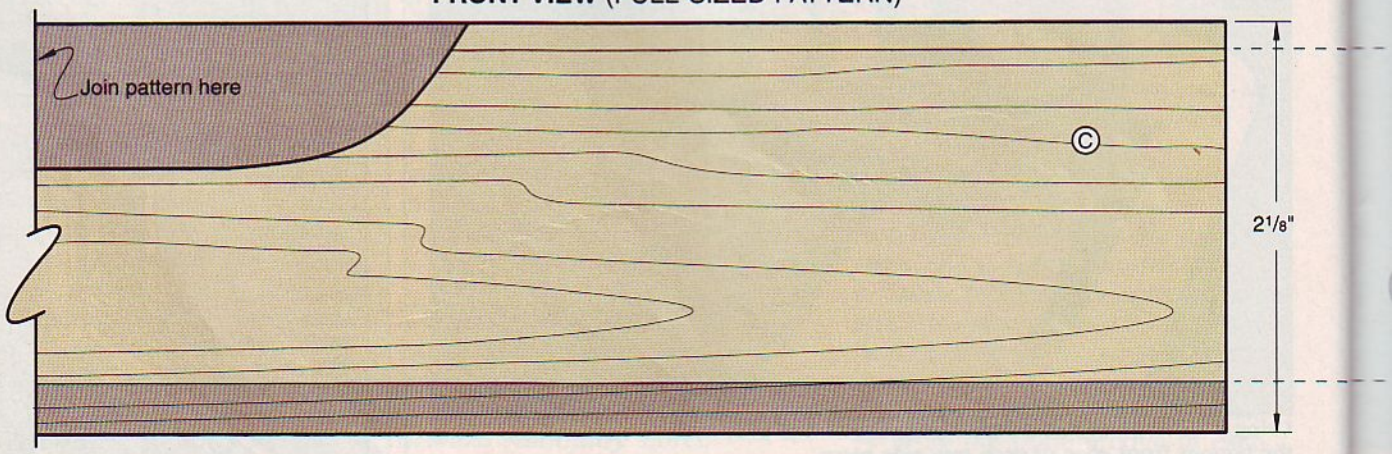

Add the finish, and attach the pen funnels

1 Finish-sand the notepaper holder, in/out trays, connectors, and the pen base. (Using a sanding block, we started with 100-grit, and proceeded to 150-grit, and finally 220-grit sandpaper.) Sand a slight round-over along all edges, especially along the curved front opening of the in/out tray and notepaper holder.

2 Adhere the funnels to the base where shown on the drawing *below right*. (We found that the funnels stick better if you apply them before applying the finish. See the Buying Guide for our source of the pen, pencil, and funnels.)

3 Mask the pen funnels, and apply the finish to all the parts. (We applied several coats of Deft spray lacquer finish, steel wooling lightly between coats with 0000 steel wool. Since off-the-shelf steel wool is often protected from rust with a light coat of oil, we rinsed our steel wool beforehand with lacquer thinner to remove any oil. The oil from uncleaned steel wool can transfer to the wood and contaminate the finish. Also, rub lightly to prevent buffing through the finish to the bare wood.)

4 Apply self-adhesive rubber, cork, or felt pads to the bottom of the pen holder. Remove the masking from the pen funnels.

Buying Guide

- **Executive pen and pencil set.** Gold-colored pen, pencil, two funnels, and two self-adhesive bases. Kit no. WM1292-B, $19.55 ppd. Cherry Tree Toys, P.O. Box 369, Belmont, OH 43718. Or call 800/848-4363 to order.
- **Hardwood kit.** Five pieces ½×3¾×24" walnut, four pieces of 1/16×3¾×24" maple, plus stock cut slightly oversize for notepad holder part C and tray parts C, D, and E. All-sanded surfaces (no knife marks), stock no. W1292, $34.95 ppd. Heritage Building Specialties, 205 North Cascade, Fergus Falls, MN 56537. Call 800/524-4184 to order.

IN/OUT TRAYS (2 TRAYS)

Bill of Materials

Part	Finished Size T	W	L	Matl.	Qty.
A sides	⅜"	2¾"	11 3/16"	WM	4
B backs	⅜"	2¾"	12⅞"	WM	2
C fronts	⅜"	2⅛"	12⅞"	W	2
D bottoms	¼"	9 13/16"	12¾"	WP	2
E connectors	½"	1¾"	8"	W	2

Material Key: WM–laminated walnut and maple, W–walnut, WP–walnut plywood.
Supplies: clear finish, rubber or felt self-adhesive feet.

END VIEW

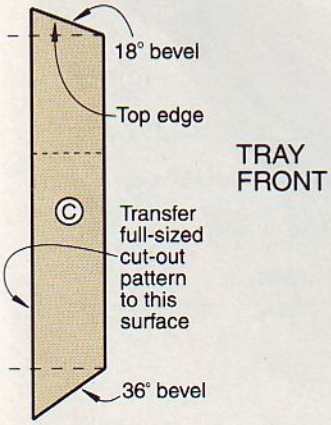

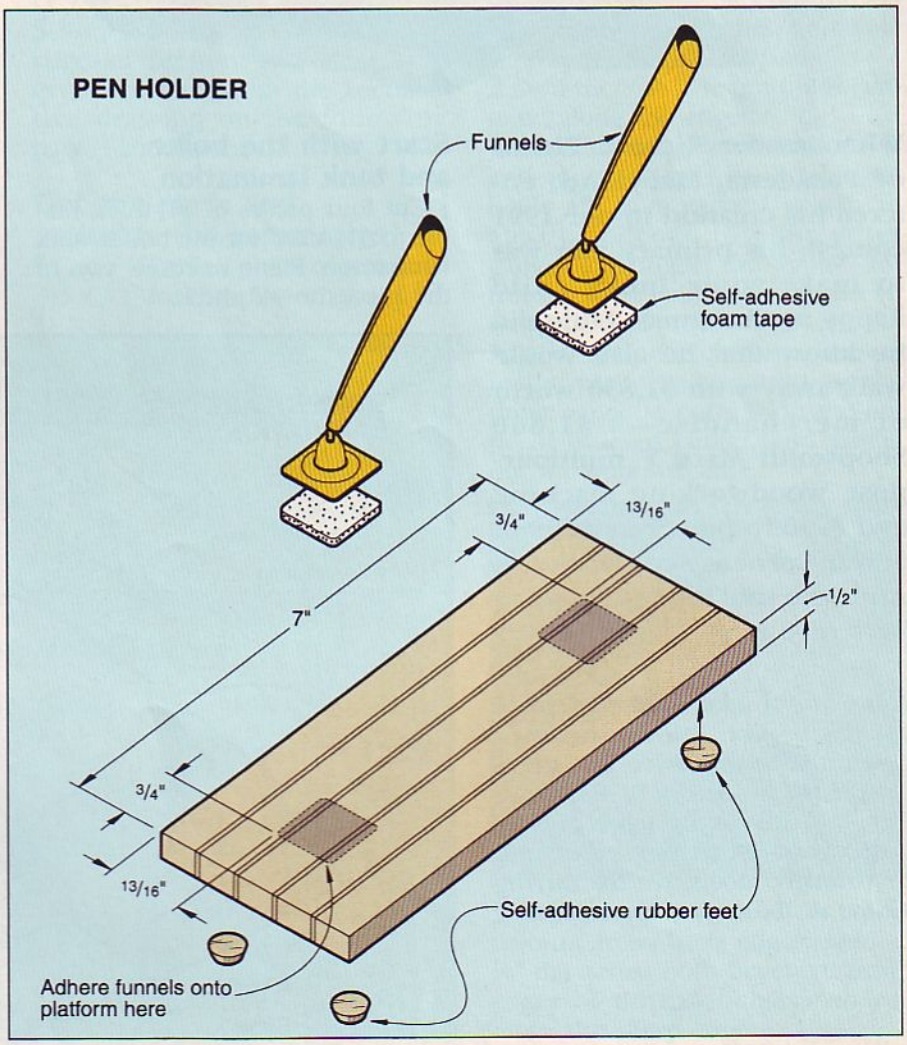

Produced by Marlen Kemmet Project Design: Nancy Armstrong Photographs: Wm. Hopkins Illustrations: Kim Downing

All aboard! The W

Another last-a-lifetime winner

When reader Richard Zichos of Pasadena, Maryland, entered his creation in our 1991 contest, his primary aim was to make some lucky child happy at Christmas. Little did he know that he also would walk away with $1,850 worth of merchandise—a $1,600 Shopsmith Mark V multipurpose woodworking machine and $250 in power tools from Seven Corners Ace Hardware. And who said it doesn't pay to be a nice guy?

Note: *You'll need some thin stock for this project. You can resaw or plane thicker stock to the thickness listed in the Bill of Materials. For our source of wheels, pegs, people, cup hooks, screw eyes, and dry-transfer labels, see the Buying Guide at the end of the article.*

Start with the boiler and tank lamination

1 Cut four pieces of ¾"-thick maple to 3 × 15½" for the boiler/tank lamination. Plane or resaw two of the pieces to ⅝" thick.

2 With the edges and ends flush, glue the four pieces face-to-face in the configuration shown on the Boiler/Tank Lamination drawing *below*. Later, remove the clamps, scrape off the excess glue from one edge, plane that edge smooth, and then rip the opposite edge for a 2¾" finished width.

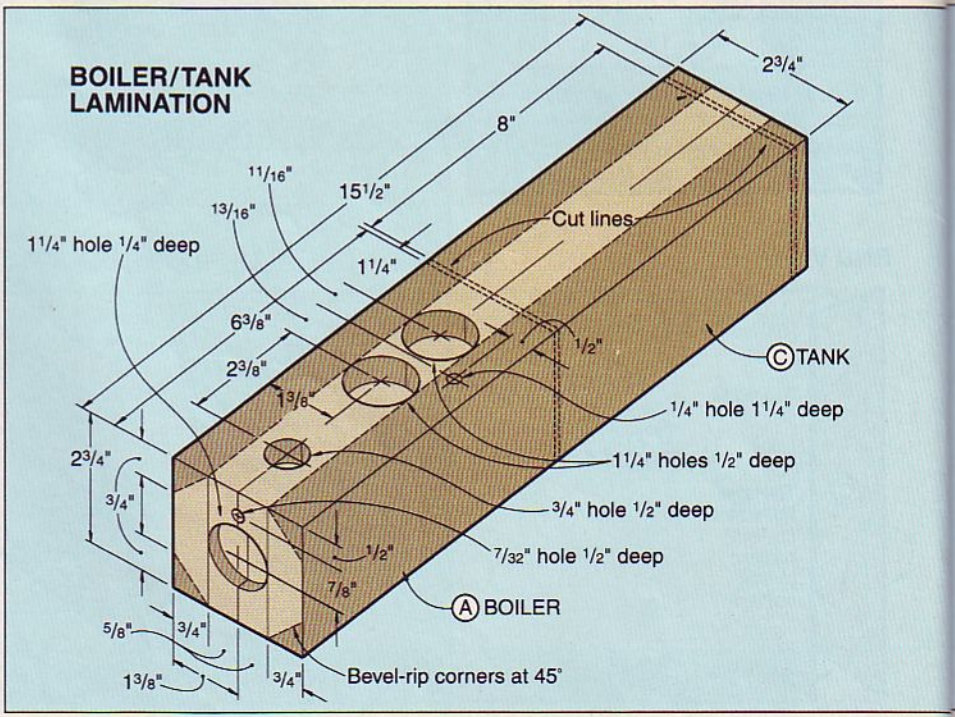

WOOD Express

from the Build-A-Toy™ contest

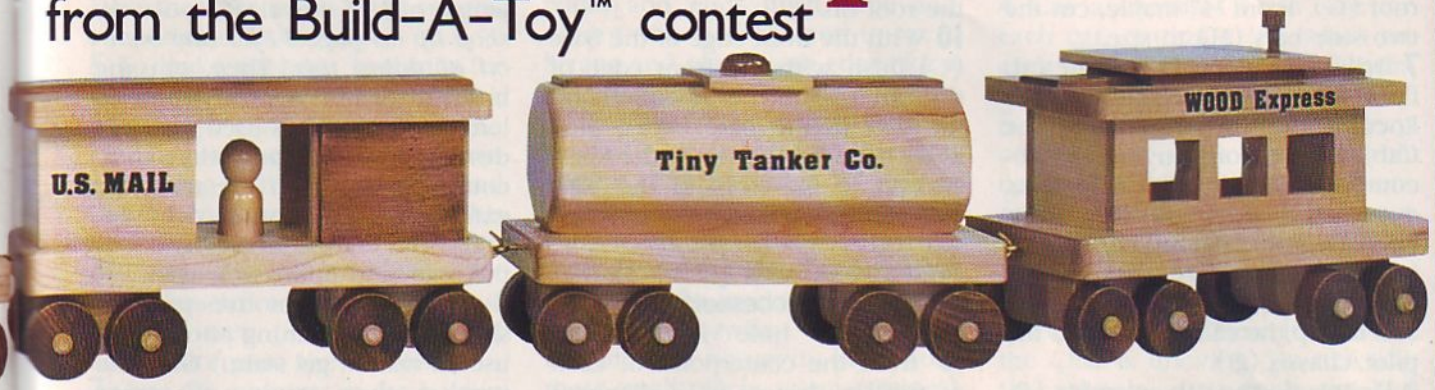

3 Using the Boiler/Tank Lamination drawing for dimensions, mark all the hole centerpoints (top and front) on the boiler portion, and drill the holes. (We used Forstner bits.)

4 Tilt your tablesaw blade 45° from vertical, and bevel-rip each corner of the lamination at 45° where shown on the Boiler/Tank Lamination drawing. Crosscut the boiler (A) and tanker-car tank (C) to length.

5 Rout a ¼" round-over along the edges of the front end of the boiler where shown on the Locomotive drawing on the following page. Sand smooth.

Cut the parts and assemble the locomotive

1 Cut a ¾"-thick piece of maple to 3½ × 12" for the pilot/chassis (B).

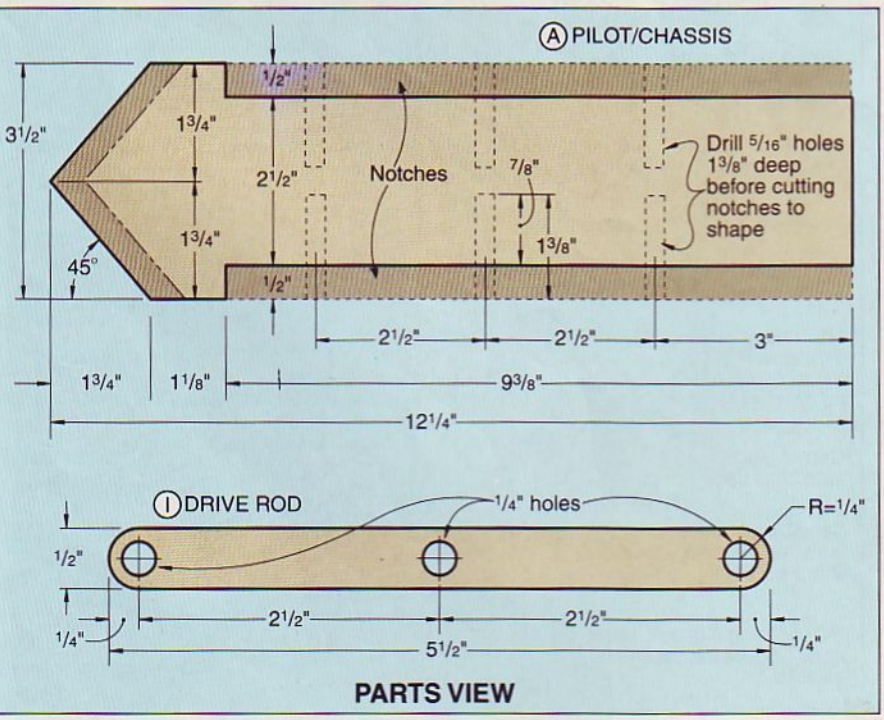

PARTS VIEW

2 Using the dimensions on the drawing *below left*, lay out the angled front end, notches, and hole centerpoints on the chassis.

3 Drill the 5/16" axle-pin holes centered along the edges.

4 To cut the pilot/chassis front end to shape, tilt your tablesaw blade 45° from vertical. Attach an auxiliary fence to your miter gauge, and angle the gauge 45° from center. Following the previously marked lines, miter-cut one edge of the pilot/chassis as shown in the photo *below*. Readjust the miter gauge to cut 45° on the opposite side of center, and angle-cut the opposite edge.

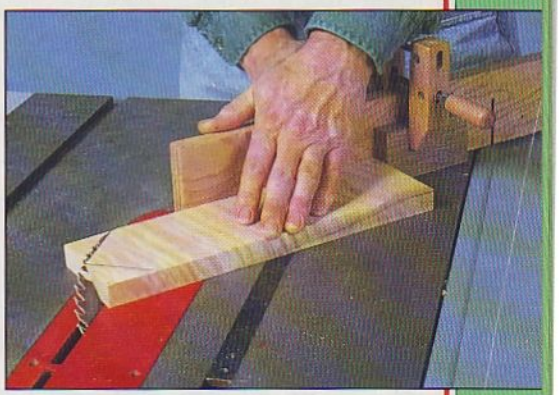

5 Being careful to sand an equal amount from both edges, sand a ⅛" flat across both bevel-cut front edges of the pilot/chassis to remove the sharp edge.

Continued

6 From ¾" maple, cut the cab base (C) to size. Then, from ¼"-thick maple (we resawed ¾" stock), cut the cab floor (D), side walls (E), front wall (F), and roof (G). From ⅛" maple, cut the two side bars (H) to size.

7 Drill a ⅞" hole through the cab floor (D) where located on the Locomotive drawing. Using the Cab detail accompanying the Locomotive drawing for reference, cut a window in both side walls, and sand a chamfer across the bottom back surface of the roof.

8 With the back edges flush, glue and clamp the cab base (C) to the pilot/chassis (B).

9 Dry-clamp the cab assembly (D, E, F), and check that the outside surfaces of the cab are flush with the outside edges of the boiler. Trim if necessary. The sides must be flush for adding the side bars (H) later. Glue and clamp the cab assembly together, and later glue the roof on.

10 With the front edge of the base (C) flush with the front edge of the cab assembly, glue and clamp the cab to the base. Next, glue and clamp the boiler to the chassis and to the front of the base and cab.

Add the wheels (drivers) and decorative accessories

1 Drill a 7⁄32" hole 9⁄16" deep and ⅝" from the centerpoint of each of the six drivers (2¼"-diameter wheels) where shown on the Wheel detail accompanying the Locomotive drawing. (We used a brad-point bit to eliminate bit wander.)

2 Either sand or rout a ¼" roundover on both ends of a long length of 1¼" dowel stock. *See the shop tip on* page *14 for one method of doing this.* Then, cut the headlamp and front sand dome to length. (Railroaders used the sand domes to hold sand that they could deposit onto the track for extra traction.) Round over another end of the dowel and cut the rear sand dome to length.

3 Stain the locomotive parts as shown in the opening photo. (We used a walnut gel stain.) Glue the parts in place, wiping off excess glue with a damp cloth.

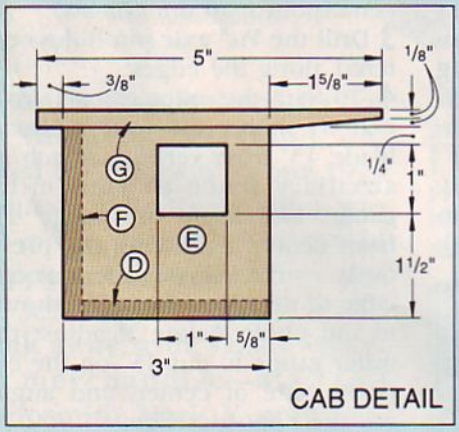

CAB DETAIL

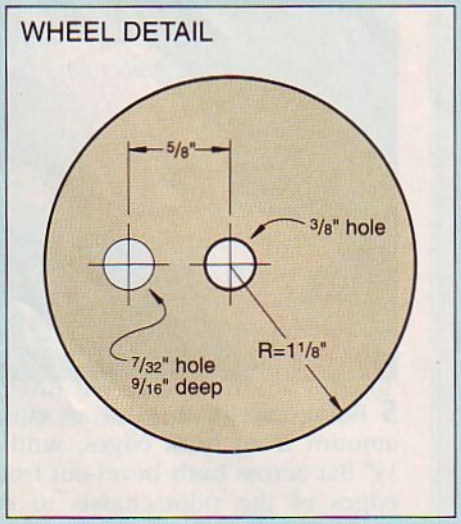

WHEEL DETAIL

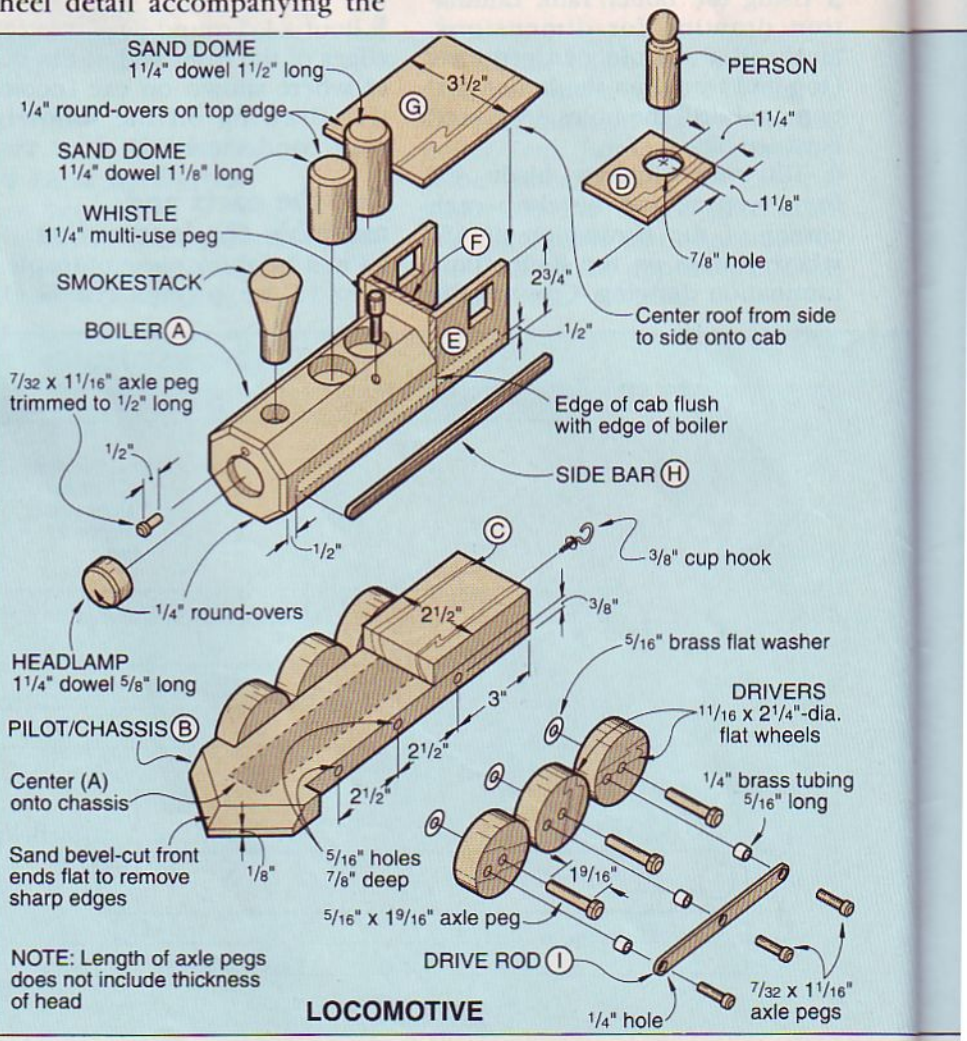

LOCOMOTIVE

4 Using the Parts View drawing for reference, transfer the drive rod (I) outline and hole centerpoints to a piece of ⅛" stock. Repeat to make another pattern. Drill the holes, and then cut the two drive rods to shape.

5 To make six brass bushings for the locomotive wheels (drivers), use a pipe cutter or hacksaw to cut six pieces of ¼" brass or copper tubing to 5/16" long. Hand-sand the cut ends smooth (we did this with 220-grit sandpaper).

6 Using toy axle pegs, pin the 2¼"-diameter wheels to the chassis, and then pin the drive rod and bushings to the wheels.

7 Glue the engineer in the hole in the cab.

Build a chassis that fits all the cars

1 To form the trucks (A), cut two pieces of ¾" maple and one piece of ½" maple to 1⅜×24". With the edges and ends flush, glue and clamp the pieces face-to-face. Scrape and plane both edges for a 1¼" finished thickness.

2 For each car, cut a pair of trucks (A) to length from the lamination. Cut and sand ⅜" round-overs on the ends of each where shown on the Chassis drawing and accompanying Truck detail. (We held the trucks with a handscrew clamp when bandsawing the ends; do not try to hand hold these small pieces when cutting.)

3 Mark the centerpoints on each truck where located on the Truck detail. Hold the pieces steady with a handscrew clamp, and drill the holes on the drill press. (We used the depth gauge to ensure consistent depth from hole to hole.)

4 Cut a chassis (B) to size for each car, cutting a ¼" radius on each corner. Rout ⅛" round-overs along all edges of each chassis.

5 Drill a 1/16" pilot hole ⅜" deep centered in each end of each chassis and back end of the locomotive for adding the cup hooks and screw eyes later. The caboose requires only one hole.

6 Glue and clamp a pair of trucks to each chassis where located on the Chassis drawing. Do not add the wheels until each car has been fully assembled.

Continued

Bill of Materials

Part	Finished Size T	W	L	Matl.	Qty.
LOCOMOTIVE					
A* boiler	2¾"	2¾"	6⅜"	LM	1
B pilot/chassis	¾"	3½"	12¼"	M	1
C base	¾"	2½"	4"	M	1
D floor	¼"	2¼"	2¾"	M	1
E sides	¼"	2¾"	3"	M	2
F front	¼"	2¼"	2½"	M	1
G roof	¼"	3½"	5"	M	1
H side bars	⅛"	½"	8½"	M	2
I drive rods	⅛"	½"	5½"	M	2

*Initially cut the part marked with an * oversized. Then, trim it to finished size according to the how-to instructions.

Material Key: LM–laminated maple
M–maple

Supplies: 1¼" dowel stock, 5/16" brass flat washers, ¼" brass tubing, stain, polyurethane.

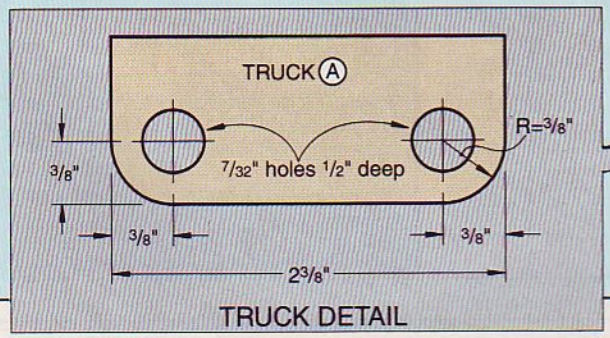

TRUCK DETAIL

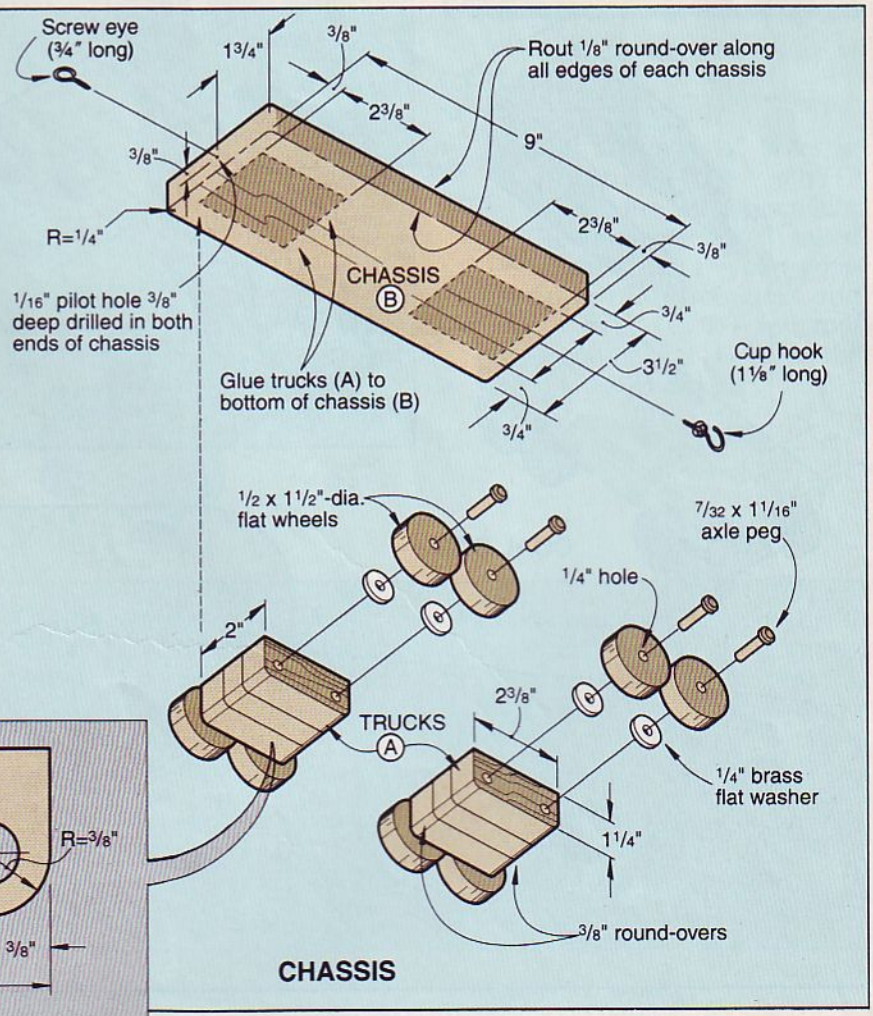

CHASSIS

7 Using the Exploded View drawings and accompanying Bill of Materials, cut the pieces and assemble each car.

8 After assembling the entire train, finish-sand each car, and peg the wheels to the trucks.

9 To apply the dry-transfer decals, see the Buying Guide on the *opposite page* for our source of the dry-transfer decals, burnishing tool, and application instructions. Use the opening photo and the wording on our train. Finish with a clear polyurethane. Do not use lacquer over the dry-transfer labels. Lacquer will disolve the labels and adhesive.

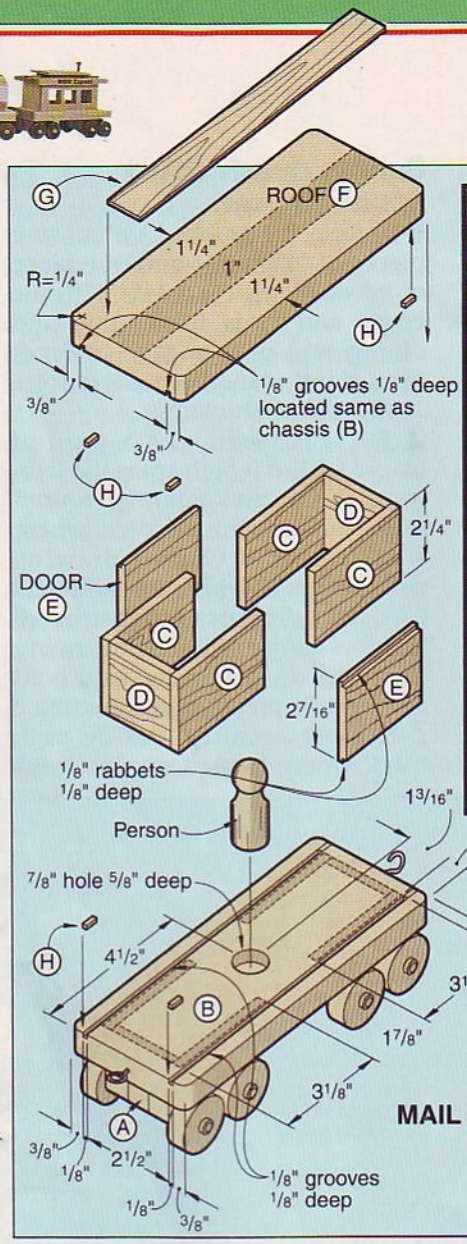

MAIL CAR

Bill of Materials

Part	Finished Size T	W	L	Matl.	Qty.
MAIL CAR					
A* trucks	1¼"	2"	2⅜"	LM	2
B chassis	¾"	3½"	9"	M	1
C sides	¼"	2¼"	3⅛"	M	4
D ends	¼"	2¼"	1⅞"	M	2
E doors	¼"	2⅞6"	2¾"	M	2
F roof	½"	3½"	9"	M	1
G top	⅛"	1"	9"	M	1
H stops	⅛"	⅛"	⅜"	M	8

*Initially cut the part marked with an * oversized. Then, trim it to the finished size according to the how-to instructions.

Material Key: LM–laminated maple, M–maple
Supplies: ¼" brass flat washers, polyurethane.

To form the grooves for the car doors (E), cut a pair of ⅛" grooves ⅛" deep in the top face of the chassis (B) and bottom face of the roof (F). Cut ⅛" rabbets ⅛" deep along the top and bottom edges of each door. Glue the door stops (H) in place after assembly.

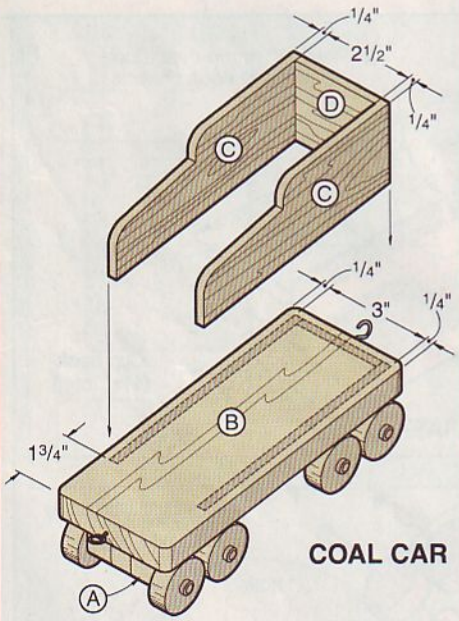

COAL CAR

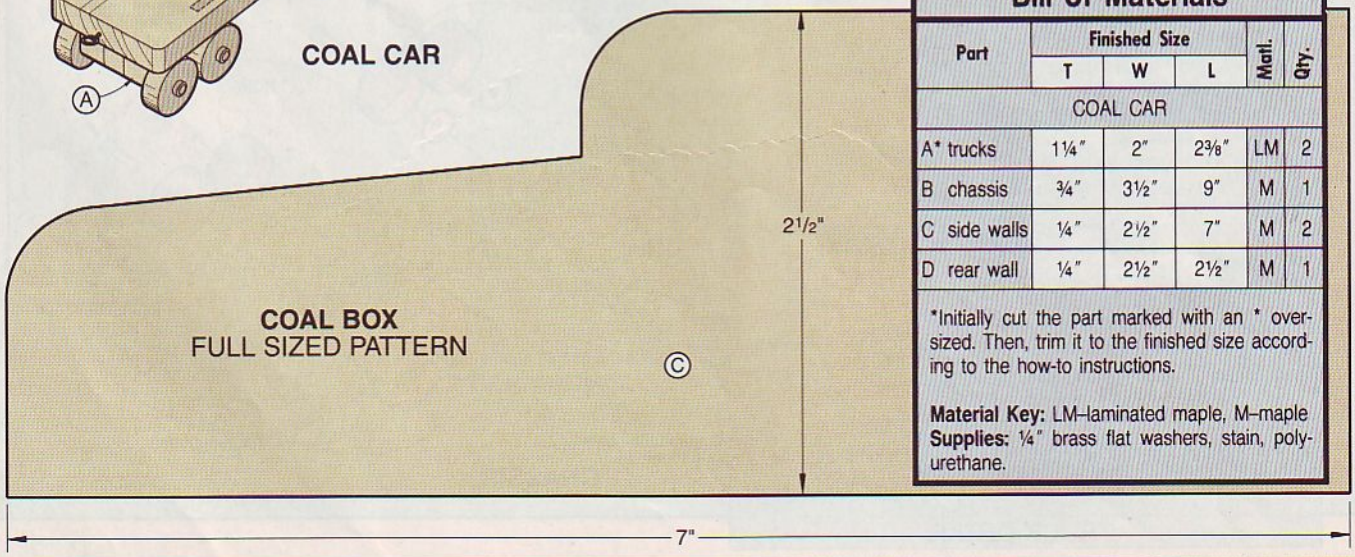

Bill of Materials

Part	Finished Size T	W	L	Matl.	Qty.
COAL CAR					
A* trucks	1¼"	2"	2⅜"	LM	2
B chassis	¾"	3½"	9"	M	1
C side walls	¼"	2½"	7"	M	2
D rear wall	¼"	2½"	2½"	M	1

*Initially cut the part marked with an * oversized. Then, trim it to the finished size according to the how-to instructions.

Material Key: LM–laminated maple, M–maple
Supplies: ¼" brass flat washers, stain, polyurethane.

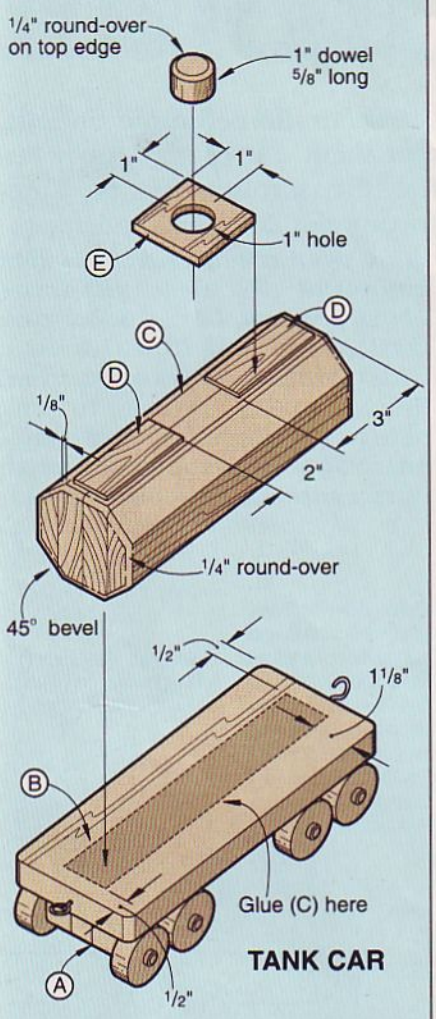

TANK CAR

Bill of Materials					
Part	Finished Size T	W	L	Matl.	Qty.
TANKER					
A* trucks	1¼"	2"	2⅜"	LM	2
B chassis	¾"	3½"	9"	M	1
C* tank	2¾"	2¾"	8"	LM	1
D tops	⅛"	1"	2⅝"	M	2
E tank dome	¼"	2"	2"	M	1

*Initially cut parts marked with an * oversized. Then, trim each to finished size according to the how-to instructions.
Material Key: LM–laminated maple, M–maple,
Supplies: ¼" brass flat washers, 1" dowel stock, stain, polyurethane.

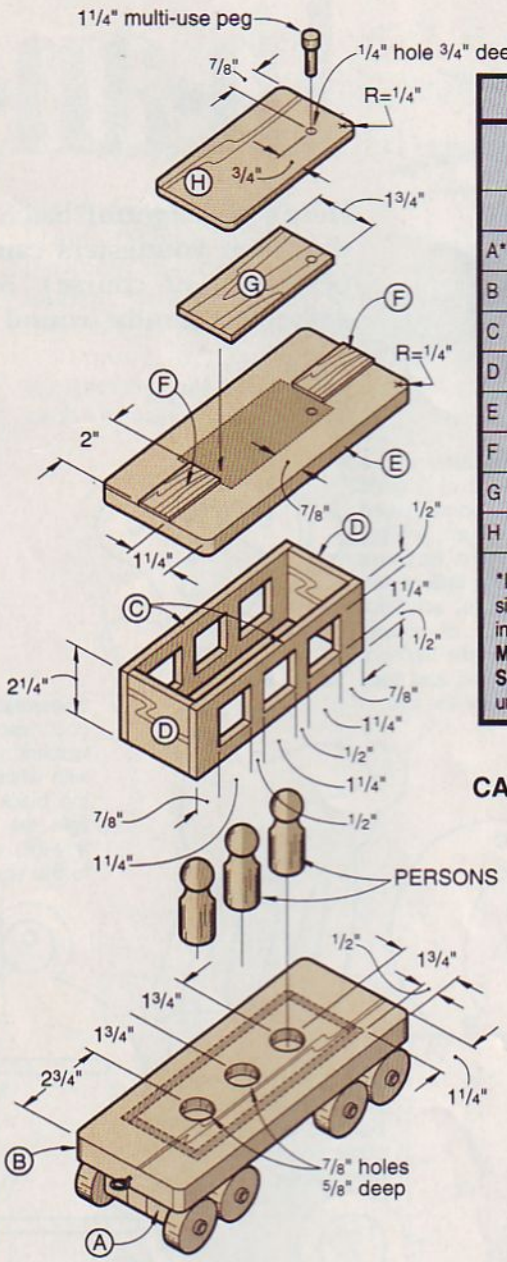

CABOOSE

Bill of Materials					
Part	Finished Size T	W	L	Matl.	Qty.
CABOOSE					
A* trucks	1¼"	2"	2⅜"	LM	2
B chassis	¾"	3½"	9"	M	1
C sides	¼"	2¼"	6½"	M	2
D ends	¼"	2¼"	2"	M	2
E roof	½"	3½"	8"	M	1
F tops	⅛"	1"	2"	M	2
G support	¼"	1¾"	4"	M	1
H roof	¼"	2½"	5"	M	1

*Initially cut the part marked with an * oversized. Then, trim it to the finished size according to the how-to instructions.
Material Key: LM–laminated maple, M–maple
Supplies: ¼" brass flat washers, stain, polyurethane.

Drill a trio of ⅞" holes in the chassis (B) where shown for the passengers. Glue the passengers (called "persons" by toy-part companies) in place. Next, add the walls (C, D) and roof assembly (E, F, G, H) to the caboose chassis.

Buying Guide

• **Train kit.** Includes all the flat wheels, axle pegs, smokestack, multi-use pegs, persons, 1" and 1¼" birch dowel stock, brass-plated cup hooks, and brass-plated screw eyes to make the train. Kit no. WM1292-A, $29.95 ppd. Cherry Tree Toys, P.O. Box 369, Belmont, OH 43718. Or call 800/848-4363 to order.

• **Labels and tool.** Sheet of dry-transfer train labels (plus extras, allowing you room for error), burnishing tool, and application instructions. $9.95 ppd. The Art Store, 600 Harding Road, Des Moines, IA 50312 or call 800/652-2225 to order.

Produced by Marlen Kemmet
Project Design: Richard J. Zichos, Pasadena, Md.

Photographs: Wm. Hopkins
Illustrations: Kim Downing

In-an-instant o

Here's a delightful batch of decorations simple enough that even youngsters can cut them out (with proper supervision, of course). After the scrollsawing is done, gather the family 'round for a yuletide painting fest.

***Cut your ornaments** from thin material. We used 5/32" Baltic birch plywood, but 1/8" solid stock will work, too. You'll need a 2½×3" blank for each ornament.*

Photocopy the full-sized patterns. Affix one to each blank with spray adhesive or rubber cement.

Rudolph Start with a base coat of 2 parts burnt sienna mixed with 1 part white. Paint the hooves black, the antlers and eye white, and the nose red, of course. Add a white highlight to the nose, and draw a circle for the eye.

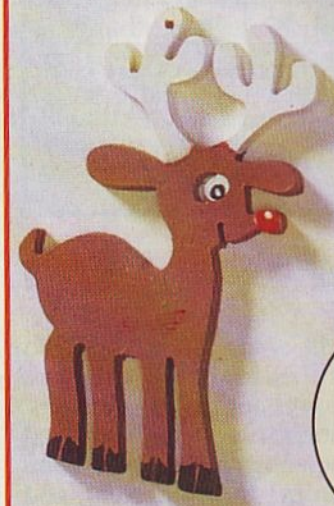

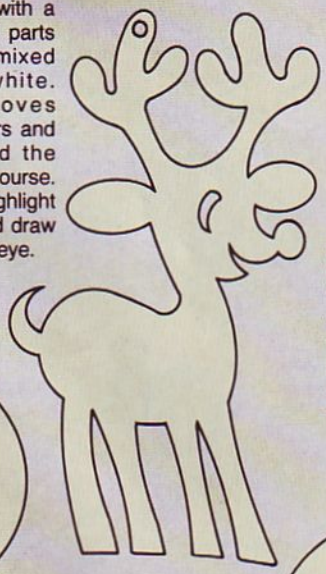

Snowman Paint a white base coat, black hat, red scarf, and hatband. Outline the hatband with white, and the scarf with the black fine-line pen. Highlight the hat crown with watery-thin white, and add fringe to the scarf with the pen.

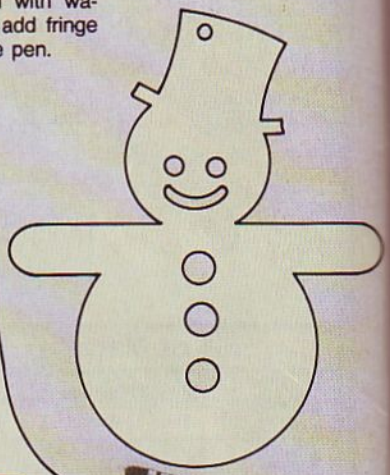

Candle Paint the candle holder silver, the candle red, and the flame and circle yellow. Outline the flame with red. Draw the candle top and the lines on the holder with the black pen. Add white highlights where shown.

Bell Paint the red base coat. Outline the bell and add the accents shown with the gold marker.

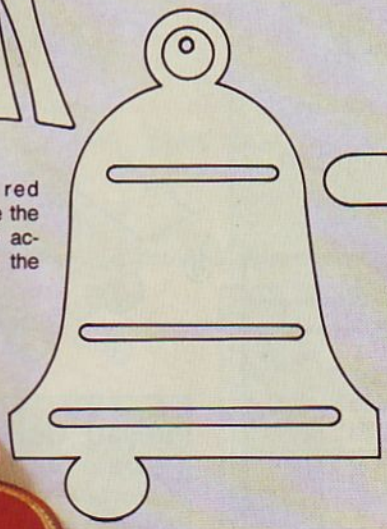

FULL-SIZED PATTERNS

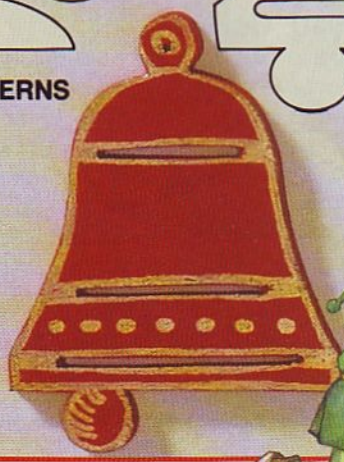

tornaments

Fun and easy scrollsawed decorations

With thin material, you can stack-cut up to a half-dozen copies of an ornament at one time. Just stack the blanks, holding them together with double-faced tape between the layers. Place the blank with the pattern attached on top of the stack.

Drill the 1/16" hanging holes and blade start holes where indicated on the patterns. (You can drill larger holes instead of making the round inside cuts, too.) Back the stock with scrapwood when drilling to prevent splintering.

Fit your scrollsaw with a #5 blade, .037×.015" with 14 teeth per inch. Start cutting out each ornament with the inside cuts, and then saw around the outline.

Remove the pattern, separate the pieces, and sand. Then, paint each ornament on both sides.

Follow the painting directions with the patterns, or paint them in color schemes of your own. (We used acrylic artist's colors listed *below*; watercolors or markers would work, too.) Hang each completed ornament with a loop of black thread or a wire hook.

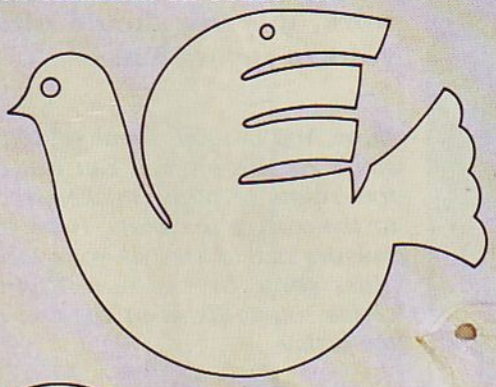

Dove Paint a white base coat, then a coat of iridescent white. Paint a green sideways figure-8 and two streamers for the ribbon. Add three red berries with white highlights.

Tree Paint the green base coat. Outline the round cutouts in red.

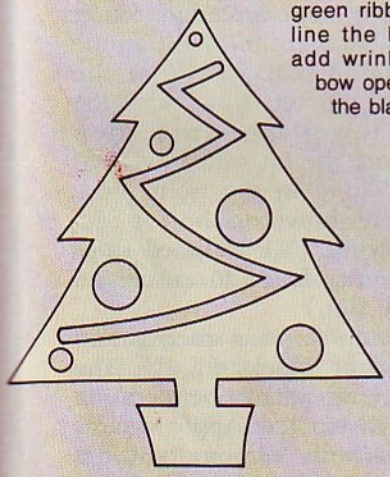

Candy cane Paint the white base coat, red stripes, and green ribbon. Outline the bow and add wrinkles and bow opening with the black pen.

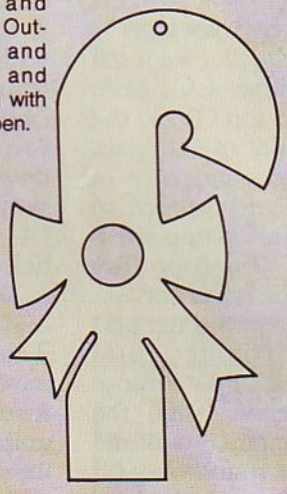

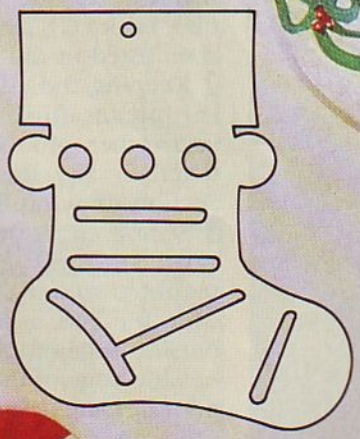

Sock Paint the red base coat, and add a green cuff at the top. Draw outlines and write on some good person's name with the gold marker.

Paint colors We used white, iridescent white, black, red, metallic emerald green, bright yellow, burnt sienna, and metallic silver acrylic artist colors. For accents, we used a black fine-line pen and a Pilot gold marker, available from stationers or art-supply dealers.

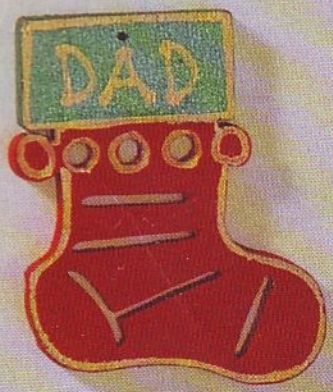

Project Design: Media Enterprises, John Lemieux Rose

Photograph: Wm. Hopkins

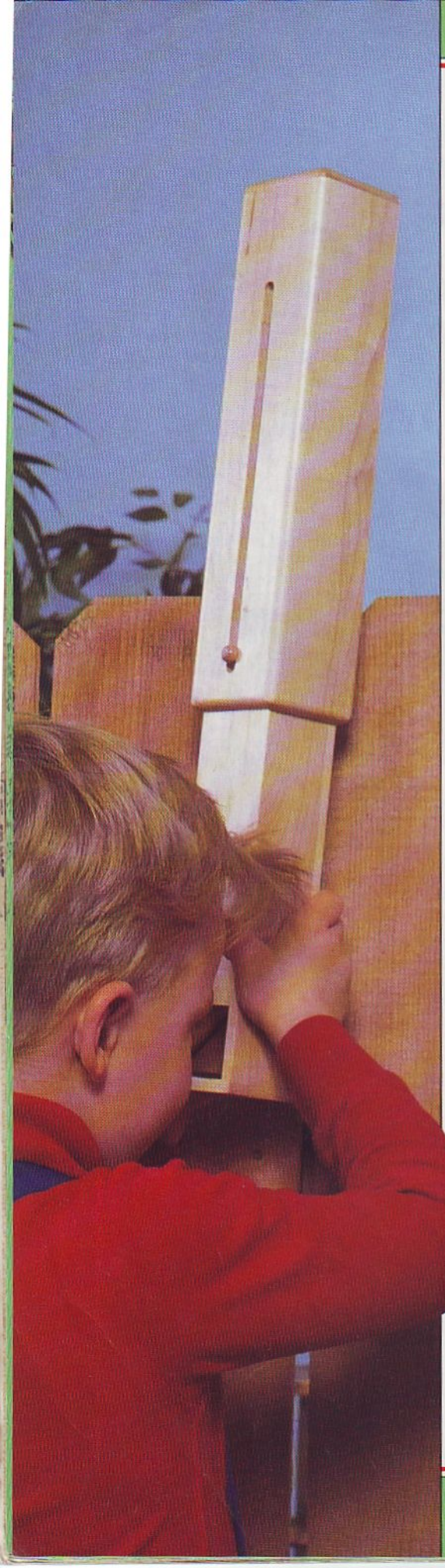

Sneak-a-peek p

Your little investigator will enjoy peering over sofas and around corners searching for his buddies with this expandable project. Solidly built to take plenty of espionage work, this toy should offer years of spying fun.

Note: You'll need some ¼"-thick stock for this project. You can either resaw or plane thicker stock to the correct thickness. Have the mirrors cut to size at your local glass shop, or use our Buying Guide source listed at the end of the article.

Start with the top section

1 From ¼"-thick stock (we used maple), cut the sides (A), front (B), back (C), and top (D) to the sizes listed in the Bill of Materials.

2 Keeping the edges and ends of the pieces flush and square to each other, glue and clamp them together. See the Periscope Top Section drawing for reference.

3 Scrape off the excess glue, and sand smooth. Fit your table-mounted router with a ¼" round-over bit and a fence. Align the outside edge of the fence with the outside edge of the round-over bit pilot bearing. (The fence prevents the bit from dipping into the mirror opening when routing.) Rout the edges of the top section where shown on the Top Section drawing.

4 Tilt your tablesaw blade to 45° from vertical, and bevel-rip both edges of a ¼"-thick piece of 12"-long maple to 2⅜" wide. Crosscut the angled mirror block (E) to length (2") from the 2⅜ × 12" strip. Save the remaining piece—you'll use it for part (J) later.

Turn to the bottom section

1 Cut the bottom-section back (F), front (G), sides (H), and bottom cap (I) to size.

2 Dry-clamp the bottom section together, and test-fit it into the top section. The fit should be snug, yet slide easily. Glue and clamp the bottom section in the same manner as the top.

3 Bevel-rip one edge of the piece remaining when you cut mirror block (E) earlier to 2⅛" wide. Then, crosscut the bottom mirror block (J) to 1½" long.

Final assembly and cleanup

1 Glue the mirror blocks (E, J) into the periscope sections where shown in the drawings.

2 Fit your table-mounted router with a ¼" straight bit. Position the router table fence 1" from the center of the bit. Now, start the router, lower the top section down onto the bit, and rout a ¼" slot 8¼" long in the front piece (A) where shown on the Top Section drawing. (We clamped stops to the router fence to ensure an 8¼"-long slot.)

3 Sand both sections smooth, and mask mirror blocks (E, J). The foam-core tape sticks better to an unfinished surface. Apply a clear finish to both sections, and remove the masking from the mirror blocks.

4 Drill a 7/32" hole in part G where shown on the Bottom Section drawing. Before drilling, double-check that the hole aligns directly beneath the slot in part (B).

5 Insert the bottom periscope section into the top. Slide the axle peg through the slot in the top section, and glue it in place in the 7/32" hole in the bottom section. To prevent the two pieces from sliding too freely, snug the peg head against the top section when

periscope

A "fun-tastic" play-thing for your favorite private eye

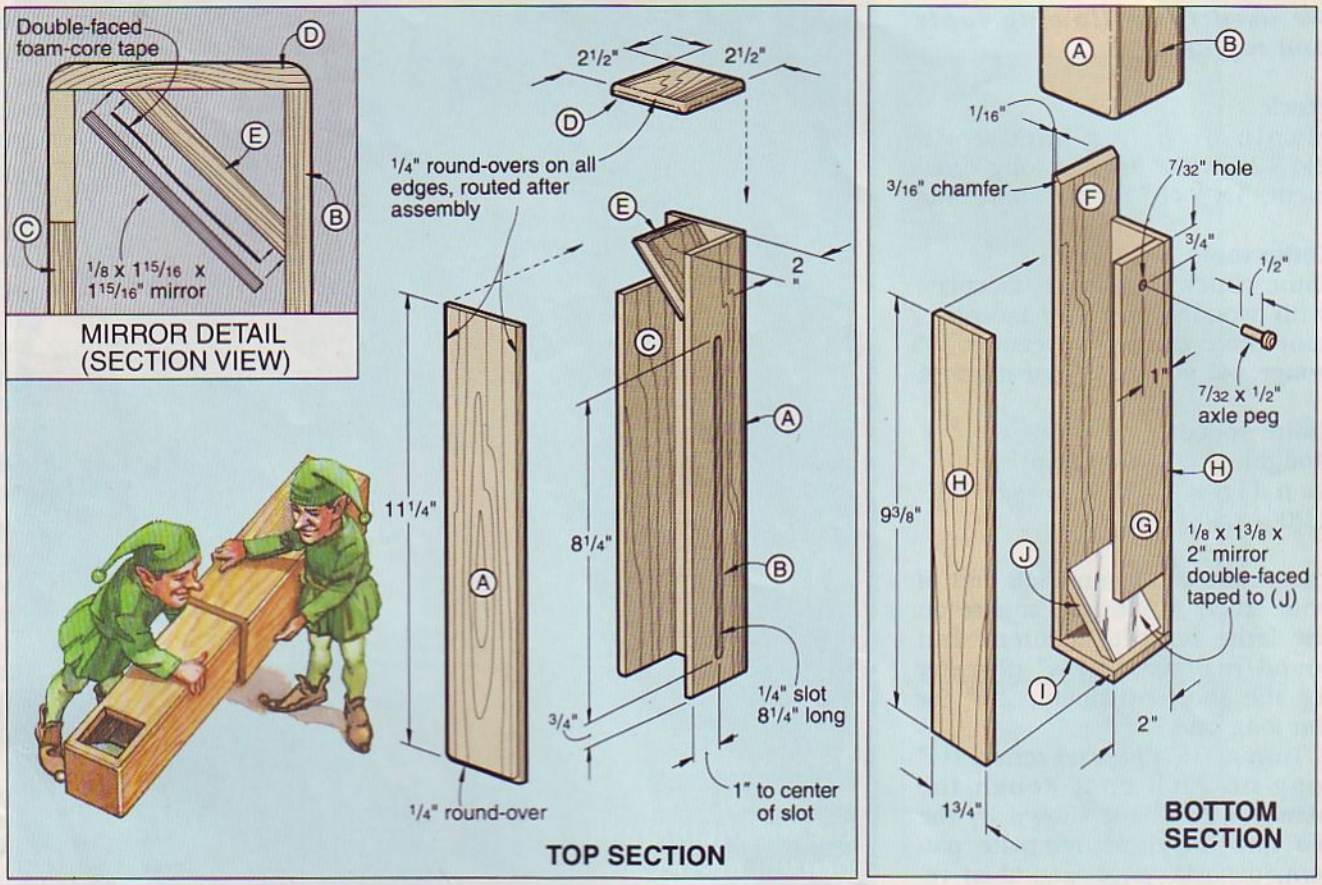

gluing it in place. For a bit more strength, you might want to use epoxy to secure the peg in place. **6** Using double-faced foam-core tape, adhere the mirrors to the mirror blocks (E, J). See the Mirror detail for locating the mirror in the top section.

Buying Guide

• **Mirrors, tape, peg.** One 1/8 × 1 15/16 × 1 15/16" mirror, one 1/8 × 1 3/8 × 2" mirror, axle peg, and double-faced foam-core tape. $11 ppd. Stained Glass Store, 3617 Ingersoll, Des Moines, IA 50312.

Produced by Marlen Kemmet
Project Design: James R. Downing
Photograph: John Hetherington
Illustrations: Kim Downing

Bill of Materials

Part	Finished Size T	W	L	Material	Qty.
TOP SECTION					
A	1/4"	2 1/2"	11 1/4"	maple	2
B	1/4"	2"	11 1/4"	maple	1
C	1/4"	2"	9 3/4"	maple	1
D	1/4"	2 1/2"	2 1/2"	maple	1
E	1/4"	2 3/8"	2"	maple	1
BOTTOM SECTION					
F	1/4"	2"	11"	maple	1
G	1/4"	1 1/2"	7 7/8"	maple	1
H	1/4"	1 3/4"	9 3/8"	maple	2
I	1/4"	2"	2"	maple	1
J	1/4"	2 1/8"	1 1/2"	maple	1

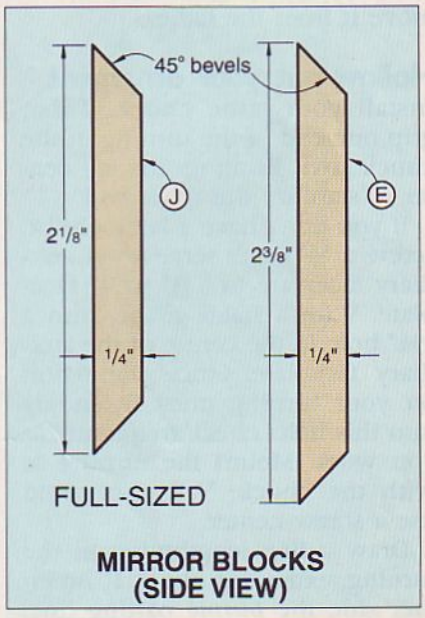

Classic shapes for C

We used the following tools and supplies:

Stock
Maple or other hardwood 2½×2½×9½" for the long ornament, 3×3×8" for the short one

Lathe tools
Lathe chuck or 3" to 4" faceplate with wooden auxiliary faceplate, spur drive center, tail center, ¼" gouge, ⅜" gouge, ⅛" parting tool

Lathe speeds
Roughing: 600–900 rpm
Sanding and finishing: 1,200–1,500 rpm

Locate the center on each end of your stock. Mount the square on the lathe between centers, and round it down to 2⅝" diameter for the short ornament, 2⅜" for the long one.

Turn a 1½"-diameter tenon 1½" long on each end. Rough the blank to the shape shown by the *red* line on either template pattern, *opposite page*, and then remove it from the lathe.

Hollow out your ornament

Install your lathe chuck. Then, grip one end of the turning in the chuck jaws. Bring up the tail center to stabilize the other end.

If you don't have a lathe chuck, screw a ¾"-thick scrapwood auxiliary faceplate to a 3" to 4" faceplate. With a small gouge, turn a 1½" hole in the center of the auxiliary faceplate. Since the tenon on your turning must fit snugly into this hole, check frequently as you work. Mount the turning as with the chuck. You also could use a screw center.

Draw a line lengthwise on the turning, extending about 1" on either side the *purple* parting line.

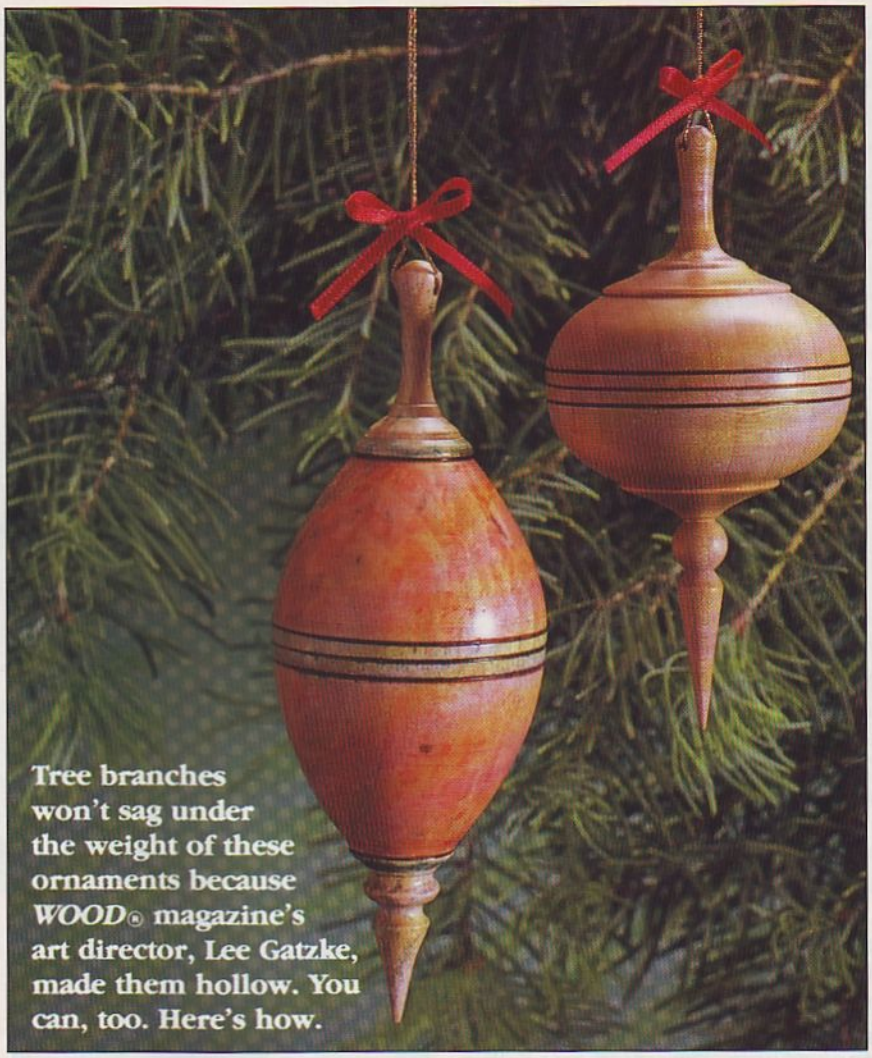

Tree branches won't sag under the weight of these ornaments because *WOOD*® magazine's art director, Lee Gatzke, made them hollow. You can, too. Here's how.

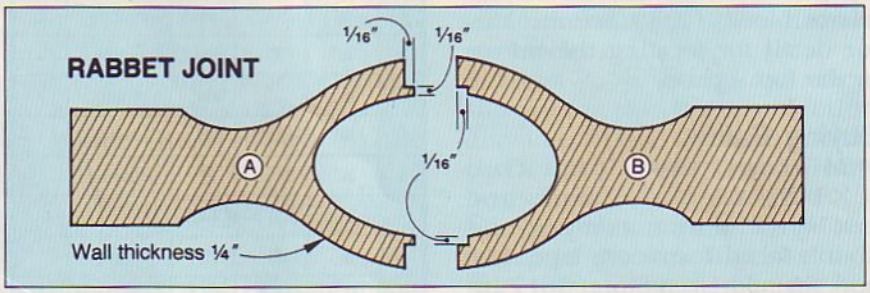

This will help you align the halves of the ornament later.

Then, part the turning into two pieces at the *purple* parting line. (You can use a parting tool or, to interrupt the grain pattern less, a hacksaw with the blade installed backwards.) Set aside the piece from the tailstock end. Slide the tailstock out of the way, and then

Christmas

Fancy tree decorations you can turn

move the tool rest around to face the parted end of the workpiece.

Now, with your gouge, form an approximate half-egg shape on the inside, leaving walls about ¼" thick. Next, move the tool rest to the side of the turning, and use your parting tool to cut a rabbet at the open end (shown on side A in the Rabbet Joint drawing).

Set that half aside, and hollow out the other half. Form the mating rabbet (side B of the Rabbet Joint drawing) on the open end.

Now, put it back together

Measure the inside diameter of your ornament, and jot the measurement down. Apply woodworker's glue around the inside of the rabbet, and join the two halves together, matching up your alignment marks. Clamp between the lathe headstock and tailstock or with a bar clamp.

When dry, remount the ornament between centers, and turn to the finished shape. To keep the finished walls about ⅛" thick, the outside diameter should equal inside diameter plus ¼".

Hide the glue joint with three shallow grooves around the middle where shown. Cut them with the tip of the parting tool laid flat on the tool rest. Burn in where indicated. To do so, wrap each end of a 12" to 18" piece of 16 gauge solid wire around a dowel handle. With the lathe running, press the stretched wire against the turning to burn a dark line in the wood. Sand the ornament with progressively finer grits from 150 to 400.

Part from the lathe, and drill a hanging hole at the top. Apply a clear finish or, as we did, paint with water colors before spraying on a clear lacquer. (After applying the orange paint, we sanded it slightly for an aged look.)

FULL-SIZED TEMPLATES FOR CHRISTMAS ORNAMENTS

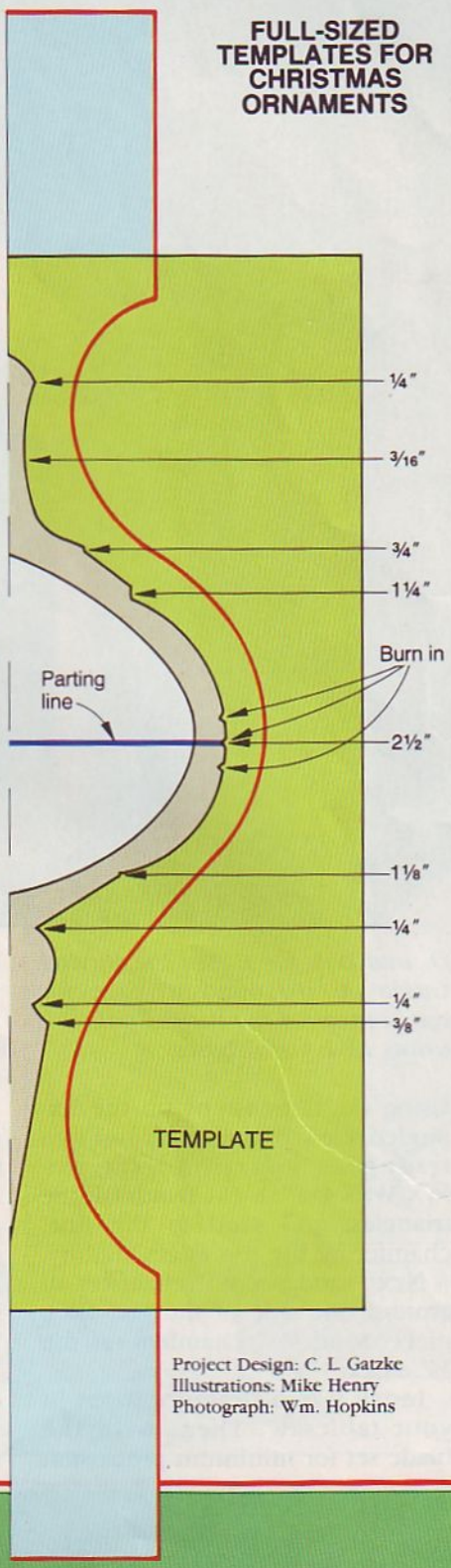

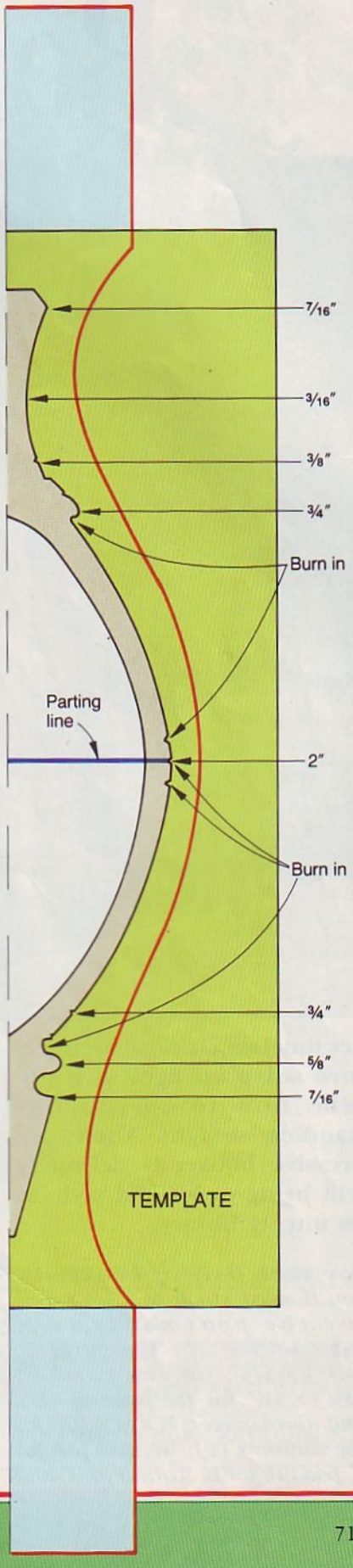

Project Design: C. L. Gatzke
Illustrations: Mike Henry
Photograph: Wm. Hopkins

Bookshelf classics

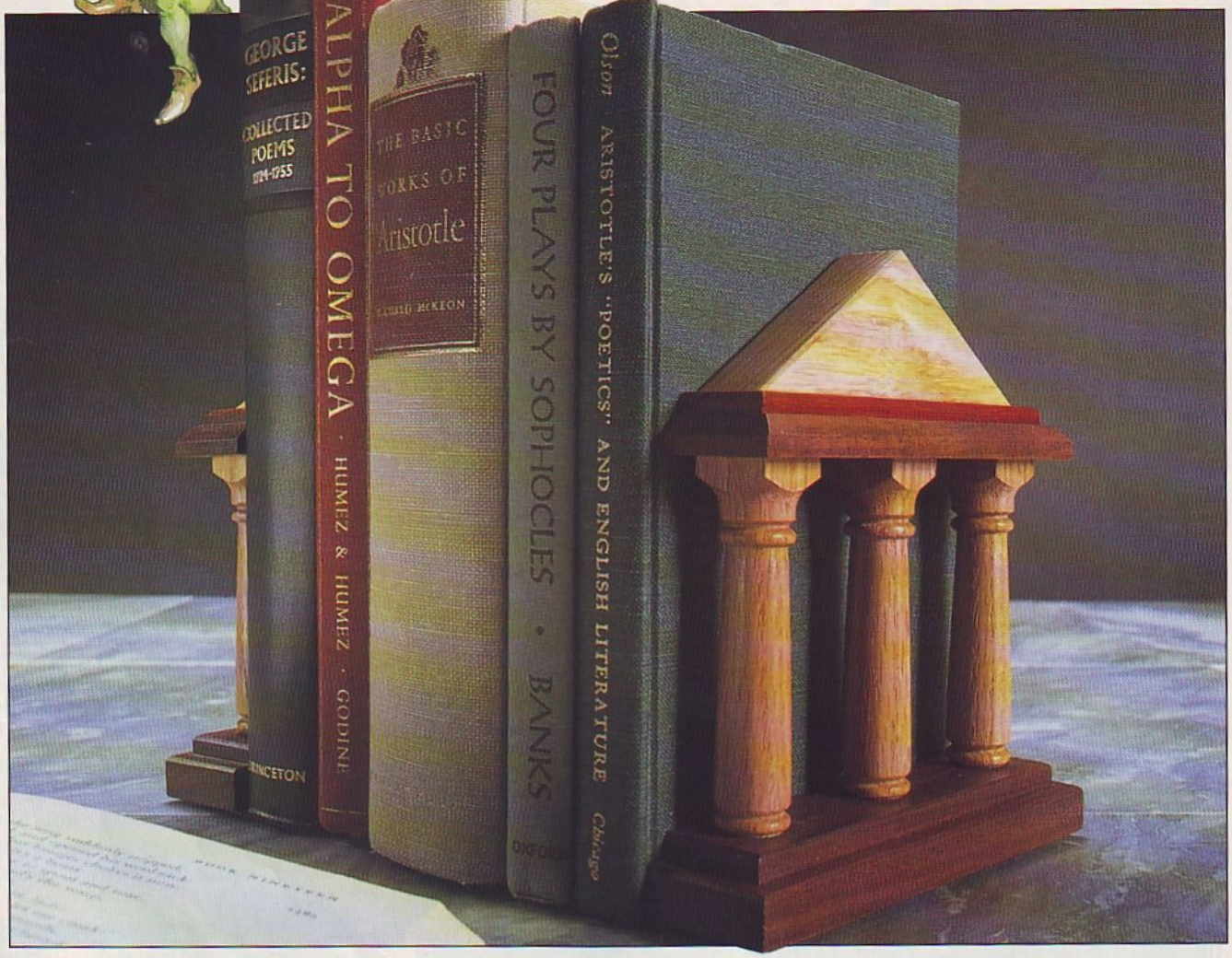

Let timeless classical architecture solve an ageless problem: how to keep books standing straight. These impressive bookends definitely will bring order and style to an unruly library.

For each pair of bookends, *you'll need stock ¾×3½×4½" for the pediments (A), 3/16×3×5⅛" for the parts B, ⅜×3×5½" for the parts C, ¾×3×5¾" for the pedestal (D), and three pieces ¾×¾×10" for the columns (E). We used ash for A, padauk for B, walnut for C and D, and oak for E. See the Buying Guide on the* opposite page *for our source for pre-turned oak columns and metal bases.*

Using the dimensions on the Exploded View drawing, lay out two triangles (parts A) on the ¾×3½×4½" stock. Bandsaw the triangles, and sand to the line, chamfering the top edges slightly.

Next, sand 1/16" 45° chamfers all around one side of the 3/16"-thick piece. Sand 3/16" chamfers on the ⅜" stock.

Install a zero-clearance insert in your tablesaw. Then, with the blade set for minimum protrusion and using a pushstick, rip a 1" width from each edge of the thinnest piece to make the two parts B. Rip a 1¼" piece from each edge of the ⅜" stock for parts C.

Assemble the pediment and entablature to sit atop the columns for each bookend, using one part A, B, and C for each. Center the parts side-to-side, glue them with the backs flush, and clamp with a heavy rubber band.

Rout ¼" rabbets ¼" deep along both edges and both ends of the ¾×3×5¾" stock. Sand slight chamfers on the top edges. Rip a 1⅜" piece from each edge to make the pedestals (D).

A monumental project that's easy to build

Chuck a ½" bit into your drill press. Drill three holes ¼" deep in each pedestal where shown.

Now, turn the six columns (E). Mount a ¾ × ¾ × 10" turning square between centers to turn two columns at a time, following the dimensions shown on the half-pattern, *below*. A small skew and a small gouge will do the job. Run the lathe at 500–800 rpm for roughing the columns, and 1500–1800 rpm for finish-turning. Sand the columns, bandsaw them apart, and then chamfer each tenon for easier assembly.

Glue a column into each pedestal hole, with the top square to the pedestal. Center the pediment and entablature assembly on top, and align its back with the pedestal's back. Glue, and clamp.

Finish-sand, and apply a clear finish. Make the metal base for each pedestal to the dimensions shown. Attach the base with three #6 × ⅜" flathead wood screws. Affix a piece of cork or other nonskid material to the bottom, and trim the edges.

Buying Guide

Metal bases and oak columns. Pre-drilled metal bases and self-adhesive cork for one pair of bookends, $5.50 plus $2.50 per order shipping and handling in U.S. Add $4.00 per kit for six preturned oak columns. Schlabaugh & Sons, P.O. Drawer 327, Kalona, IA 52247, or call 800/346-9663

Project Design: Schlabaugh & Sons
Illustrations: Jamie Downing; Mike Henry
Photograph: John Hetherington

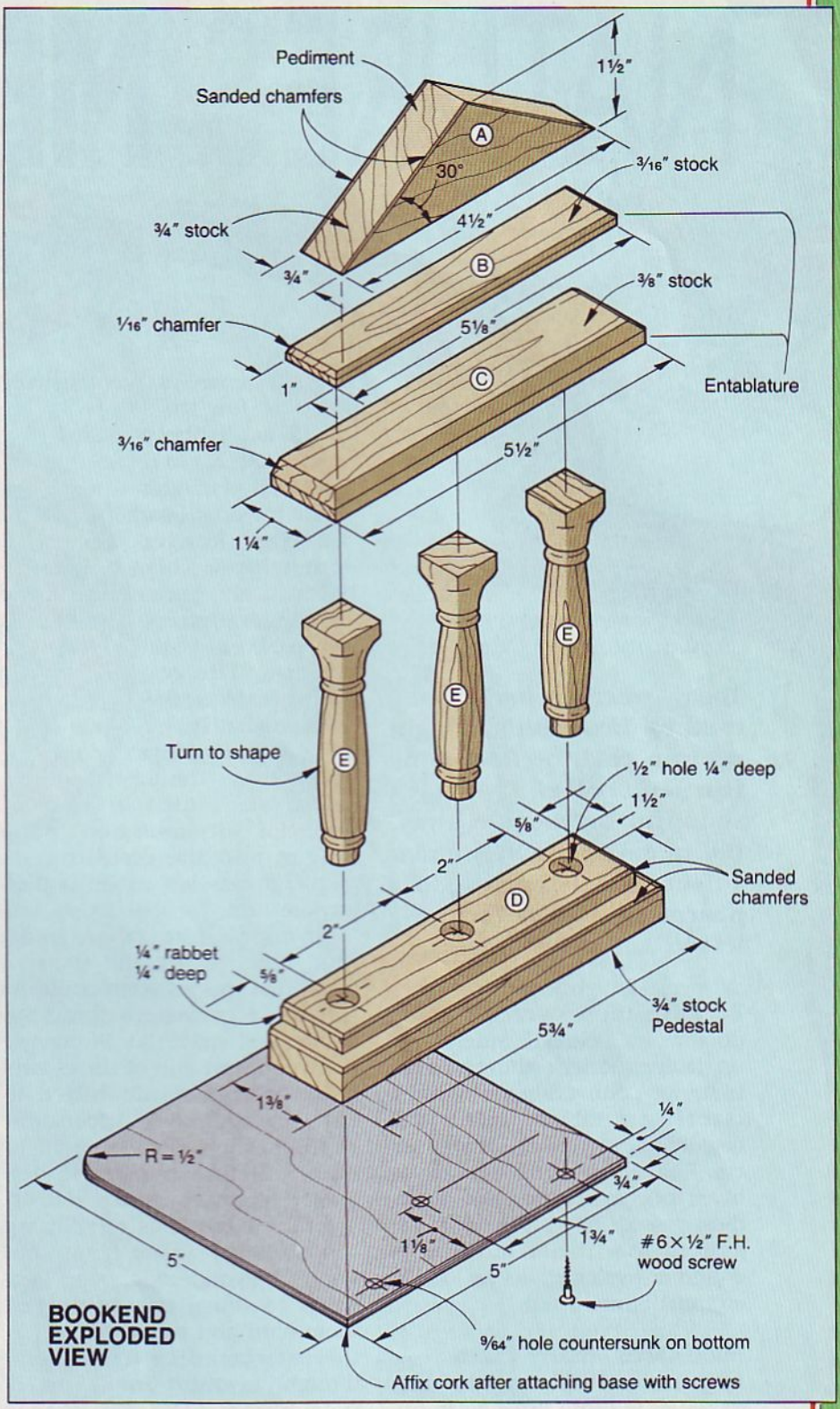

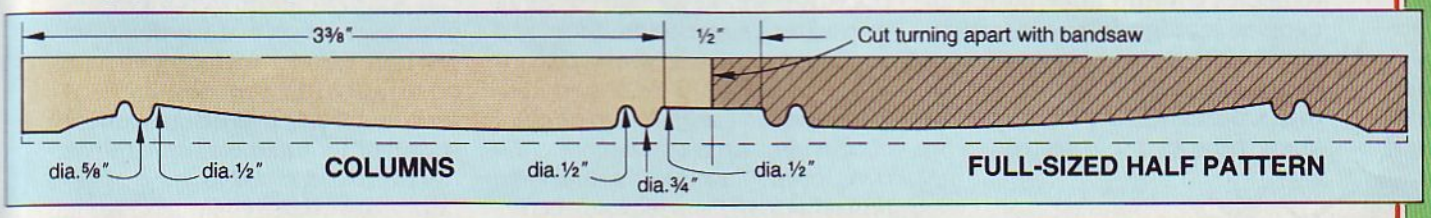

NATURE'S MEDICINE

Today, whether you're bothered by bronchitis, caught up in a cold, or floored by the flu, relief is only a spoonful or capsule away. But in days gone by, similar sufferers looked not to a pharmacy, but to the bark, leaves, and twigs of trees.

Because there weren't many doctors in Colonial America or on later frontiers, the responsibility for concocting and administering medical remedies usually fell to women homemakers. That's why you sometimes hear folk medicine—the remedies passed down through the generations from mother to daughter—referred to as "kitchen" medicine.

Folk cures' many faces

As practiced by the knowing, remedies fell into three basic categories: analgesic (pain-relieving), cathartic (purgative or cleansing), and vulnerary (healing wounds). And if a person knew how to brew tea, the simplest remedies were usually at hand. How so?

What pioneers called an *infusion* required placing natural material (bark or leaves) in a teapot with freshly boiled water, then allowing it to steep for only a few minutes. The resulting tea was taken immediately.

Decoctions were a bit stronger. The additive was boiled in water for 10 minutes or longer, and the resulting medicine was often then bottled for later use.

Of course, the twigs, buds, fruit, bark, leaves, and roots of medicinal species often could be of benefit in their natural, unadulterated state, too. Flowering dogwood was one of these, providing a reliable dentifrice to early Americans. A pioneer would strip a small twig of its bark and chew the end to produce a crude brush that actually whitened teeth as it scoured them. Sappy juice from that same dogwood twig, when applied to the gums, preserved them hard and sound.

Most remedies from trees, though, involved some sort of preparation. Let's take a peak into nature's medicine chest and see how our ancestors played doctor. (*Note:* WOOD® *magazine cannot verify the medicinal claims for any of the remedies here, even if some of them were passed down from Grandma.*)

Cures for coughs, sore throats, and other respiratory ailments

Sassafras may be America's most celebrated medicinal tree. Settlers drank a decoction of its bark for relief from bronchitis and other respiratory ailments. Even in parts of today's South, sassafras tea "perks up the blood" each spring. And throughout the frontier, other hardwoods healed, too.

When sassafras wasn't available, the boiled bark of black cherry took its place. From balsam poplar came Balm of Gilead, the clear, sticky, gumlike substance found on the buds. When diluted with water, it became cough medicine. Or, by mixing it with animal tallow for a soothing ointment, it was applied to the chest and throat.

Algonquian Indians brewed the fruit of the persimmon tree for a gargle to ease sore throats. Elsewhere, mothers cooked up the leaves of American chestnut to defeat whooping cough.

Conifer trees provided remedies, too. To rid themselves of a sore throat, Indians in the American Southwest chewed the resinous gum of pinyon pine. The pitch of Eastern white pine treated bronchitis. An oil distilled from hemlock needles became a stimulating liniment spread on the neck and chest to tame respiratory disorders.

E CABINET

A LOOK AT OLD-FASHIONED "CURES" STRAIGHT FROM THE FOREST

Treatment for aches, pains, fevers, and wounds

Some claims to the healing power of trees exist on faith alone. That's the case with the Ohio buckeye. Its nut is poisonous if eaten, but some folks, in an effort to ward off rheumatism, carried them in their pockets. But when actually stricken by rheumatic pain, sufferers found relief by grinding the needles of northern white cedar and mixing them with bear fat for an astringent ointment.

Dogwood bark, made into tea, cured the chills and fever pioneers called the ague. By mixing the bark with corn whiskey, they contrived an intoxicating cure-all. During the Civil War, Confederate doctors fought malaria by substituting dogwood bark for hard-to-get quinine.

Willow bark steeped in water proved to be a fever remedy as well as a headache reliever. Yet, the most unusual headache treatment in all of folk medicine was that relied on by the Chickasaw Indians of Mississippi and Alabama. They soaked diminutive branches of Southern white cedar in water, and then bound them around their heads until the ache disappeared!

John Josselyn, the 17th-century naturalist/historian of the Massachusetts Bay Colony, was impressed by the wonders of the tamarack or larch. He wrote in his journal: "The turpentine that issueth forth from the Larch Tree is singularly good to heal wounds and draw out the malice. . .of any Ach [by] rubbing the place therewith."

But the tamarack didn't stand alone as an external healer. Slippery elm pops up frequently in frontier tales due to its bark. Chewed, it quenched a woodsman's thirst, but he also applied the resulting softened pulp on fresh wounds to slow infection.

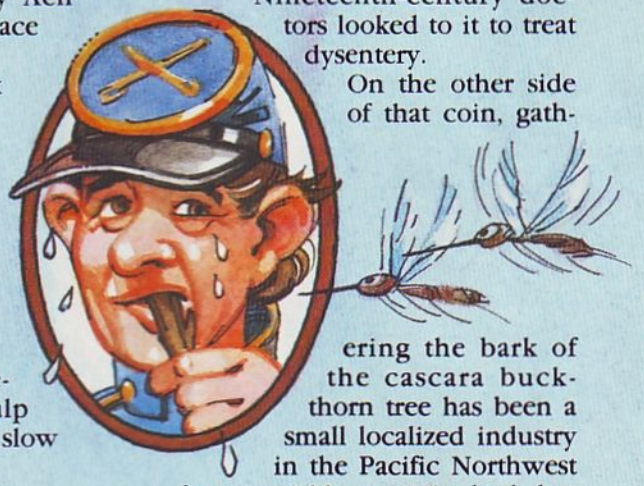

Internal medicine: tummy tonics

A decoction of the bark and buds of hemlock acted as a diuretic. The tonic also reduced gastric irritation and quieted babies who had colic.

Juniper, its berries the traditional flavoring for gin, was a favorite medicine of the Iroquois. They ate chopped juniper berries to heal urinary disorders. A tea made from the same fruit did away with cramps.

Chewing the resin of sweetgum treated a number of ailments, too. Called copalm balm in the pharmaceutical trade, it flows from the tree as a sweet-smelling liquid, but when exposed to air it hardens to a resin. Nineteenth-century doctors looked to it to treat dysentery.

On the other side of that coin, gathering the bark of the cascara buckthorn tree has been a small localized industry in the Pacific Northwest for over 100 years. Its bark has been recognized as a powerful laxative since 1877.

Today, pharmaceutical companies rely more on the laboratory than the forest for drugs to heal or relieve. Yet, in many parts of the world, natural remedies still remain a popular treatment for all types of illnesses. In Russia, for instance, the birch leaf persists as a relief from arthritic pain. Aching Russians place two pounds of leaves in a cotton sack and gently boil them in two gallons of water. Then, they add the leaf-laden sack and boiling water to a tub filled with hot water and enjoy a good soak!

Written by Peter J. Stephano
Illustrations: Jim Stevenson

Develop Your Shop Skills

HOW TO DODGE ROUTER BURNS

Exasperated readers often write and ask how they can avoid those nasty burns that occasionally pop up on routed surfaces. It's easy to understand their frustration. Burns such as the ones shown *above* can result in a sanding nightmare, or ruin the workpiece altogether. The truth is, you shouldn't have to deal with these burns at all. Just follow these simple measures.

1 Buy router bits with ball-bearing pilots. Although router bits with ball-bearing pilots cost a few dollars more, you'll find the extra investment worth it. Bearingless pilots heat up as they spin against the edge of a workpiece. Pilots with bearings run cooler because the tip of the router bit spins on the inside of the lubricated bearing, while the outside of the bearing coolly rolls along the workpiece.

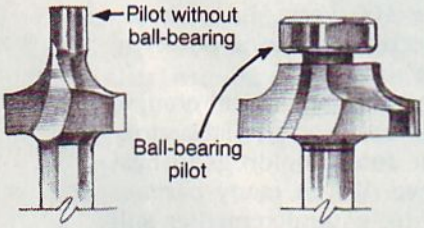

2 Keep those bits sharp. Dull cutting edges—another source of friction—can burn a workpiece because they rub the wood instead of cleanly shearing it. The solutions: 1) Buy carbide-tipped bits—they stay sharp longer than steel bits and 2) Have your router bits sharpened at the first signs of dulling. Sharpening shops charge $4–$7 for bits less than 1" in diameter.

3 Take light, multiple cuts. Even a sharp, ball-bearing piloted router bit will burn wood if you feed the router too slowly or stop the machine while the bit is spinning. So, remember to keep the router moving at a steady rate (but not so fast that the router sounds labored). To accomplish this, take several light cuts as shown *below*, instead of one or two heavy ones that may cause you to slow the feed rate.

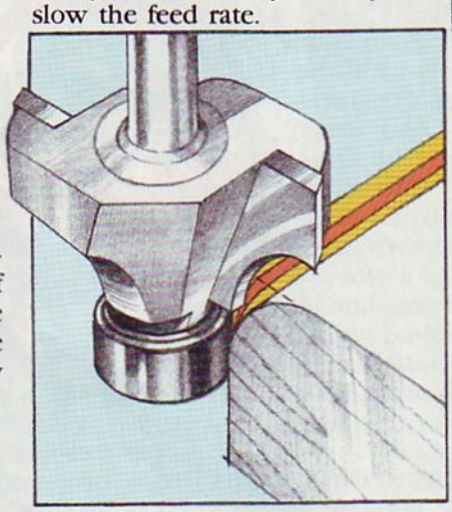

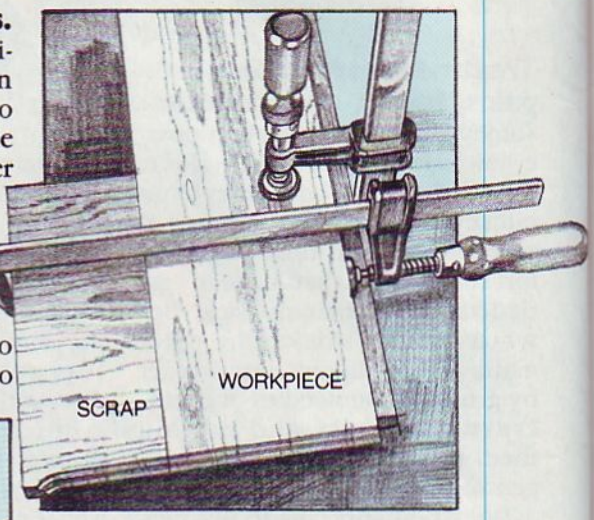

4 Don't get stalled on workpiece edges. Sometimes, it can be mighty difficult to start a router cut on the corner of a workpiece without easing the bit into the cut too slowly. To avoid burned corners, try to start the cut along an edge, then end the cut at the corner. If that's not possible, clamp a scrap block next to the starting corner as shown *above right*. The scrap must be the same thickness as the workpiece, and flush with its edge. This way, you can start the cut in the scrap and rout through the corner without slowing.

5 Use a router table whenever possible. A table-mounted router helps lessen your chances of accidental burning by giving you greater control over the workpiece, as well as feed rate. Because you don't have to worry about running out of cord, or balancing the router on the edge of a workpiece, you can concentrate on feeding the stock at a steady rate.

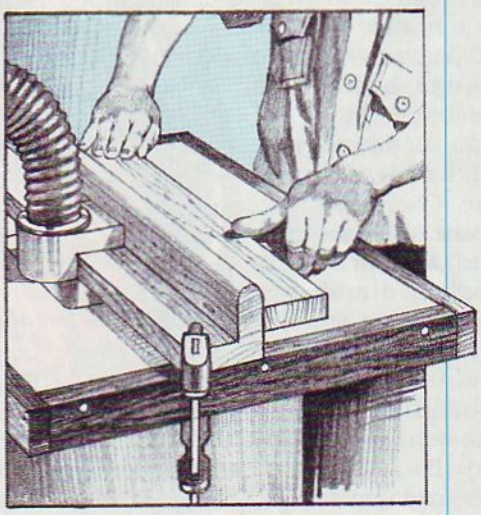

Illustrations: Kim Downing; Jim Stevenson Photograph: John Schultz

FROM BLANK TO FINISHED BOWL

THESE 8 STEPS GUARANTEE YOUR SUCCESS

Few pleasures in woodworking compare with the excitement of turning your own one-of-a-kind bowl. Often, in an hour or less, you can transform a nondescript chunk of wood into an item that will be treasured for years and years. Here's a simple method that doesn't require an expensive chuck.

You'll need these tools
In addition to a lathe, you'll need a 3" faceplate, two bowl gouges (⅜" and ½"), and a parting tool. And to measure the bowl thickness, get hold of a double-ended calipers like the one shown in Step 5.

Continued

BLANK TO BOWL

1 Ladies and gentelmen, choose your stock

Sometimes, you can find stock for bowl turning right in your own firewood pile. So-called "green" wood suits beginners nicely because it turns easily, and you can practice endlessly for little or no cost. (For more information on this topic, see the article "Green-Wood Turning" in the February 1992 issue of *WOOD*®). If you're a beginning turner, we suggest you start with bowl blanks about 6" in diameter and 3–4" thick.

Or, if you prefer, you can mail-order air-dried bowl blanks up to 10" in diameter and 5" thick, in several species. (See the Buying Guide on *page 80*.) If you buy through the mail, just remember to let the blank sit in your workshop for several weeks so it can acclimate to its new surroundings.

2 Now, prepare the blank for turning

With your bowl blank in hand, follow the four-step procedure at *right* for mounting the stock on your lathe's faceplate.

Note: *To enjoy woodturning, you need sharp tools. Dull tools will tear the end grain of your workpiece, and possibly damage it beyond repair if a tool edge catches your rapidly spinning stock. For advice on this topic, see the article "How to Sharpen Turning and Carving Tools" in the June 1992 issue of* WOOD.

3 Next, round down the bowl blank

No matter how carefully you bandsawed your stock, you'll still need to balance it by rounding it down on the lathe. Start by securing the tool rest about ¼" from the bowl blank and even with the height of the headstock center. Turn the blank by hand to make sure it doesn't hit the tool rest.

Position yourself directly in front of the bowl blank in a balanced position, with your feet about shoulder-width apart.

HOW TO MOUNT A FACEPLATE TO YOUR BOWL BLANK

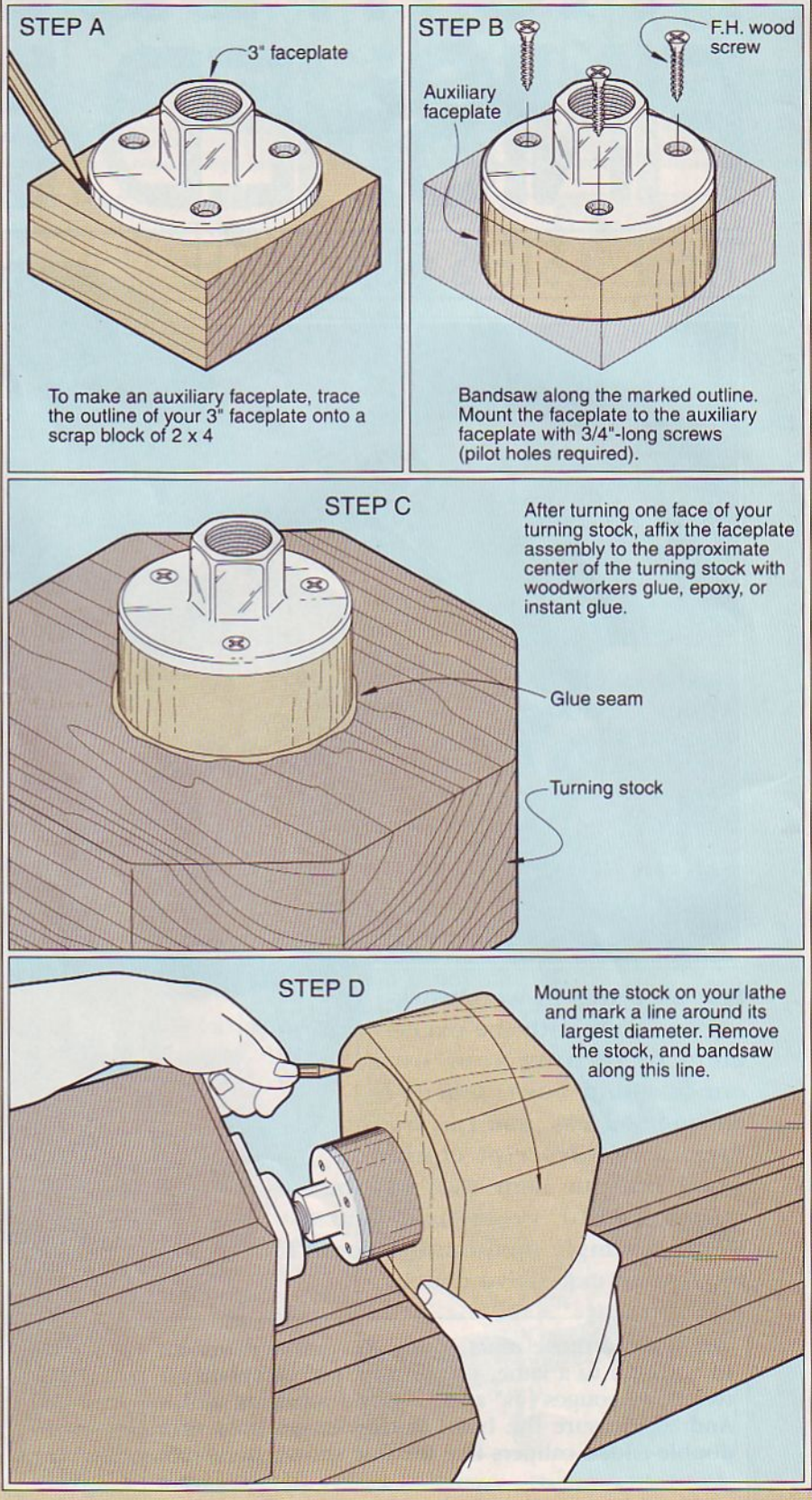
STEP A
3" faceplate
To make an auxiliary faceplate, trace the outline of your 3" faceplate onto a scrap block of 2 x 4
STEP B
F.H. wood screw
Auxiliary faceplate
Bandsaw along the marked outline. Mount the faceplate to the auxiliary faceplate with 3/4"-long screws (pilot holes required).
STEP C
After turning one face of your turning stock, affix the faceplate assembly to the approximate center of the turning stock with woodworkers glue, epoxy, or instant glue.
Glue seam
Turning stock
STEP D
Mount the stock on your lathe and mark a line around its largest diameter. Remove the stock, and bandsaw along this line.

Woodturning sends loads of debris in your direction, so wear a face shield and an approved dust mask. If you're right-handed, grip the handle in your right hand and guide the tool's shank with your left hand as shown *below.* (Lefties: reverse these directions.)

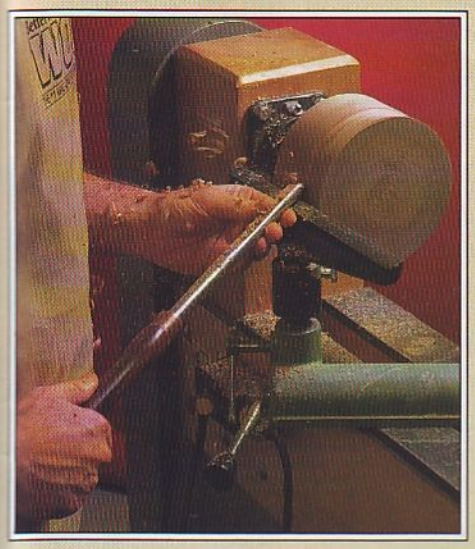

Set your lathe on low speed (preferably 500 to 750 rpm), turn it on, and with your ½" bowl gouge round down the stock until it becomes cylindrical. As shown in the photo *above,* you'll want to angle the tool slightly, with its bevel resting completely on the stock. Positioned this way, the gouge will *cut* the stock and produce long shavings. If you don't keep the bevel against the stock, the tool will *scrape* the wood, which makes small shavings and tends to tear out the end grain.

Until you completely round the blank, you'll make hit-and-miss cuts as you move the gouge from right to left across the tool rest. Take light cuts; if you try to remove too much stock, the gouge may catch the workpiece and damage it.

To know when you have finished this process, rest your gouge on top of the spinning workpiece and move it back and forth over the work. If the gouge bounces up and down, you still have some rounding to do.

***Note:** If you would like more information on how to design a bowl, see the article "A Surefire Technique for Pleasing Bowl Design" on* pages 53–57 *of the April 1989 issue of* WOOD.

4 Shape the outside of the bowl in a smooth arc

With the lathe set at about 1,200 rpm, use the bowl gouge to shape the outside of the bowl. With your first cuts, start rounding down the corner of the bowl blank closest to the faceplate. Again, you must keep the tool's bevel against the stock in order to cut rather than scrape the surface. Remove about 1/16" to 1/8" of stock with each successive pass, being careful to always move the gouge "downhill" toward the faceplate. Adjust your tool rest as necessary to keep it close to the workpiece.

As you approach the finished shape, take light cuts with a freshly sharpened 3/8" bowl gouge to maximize control and minimize grain tearout. As shown *below,* the final shape should be a smoothly flowing arc, with an absence of ridges or valleys. The diameter of the bowl's base should be one-third-or-less of the bowl's rim diameter.

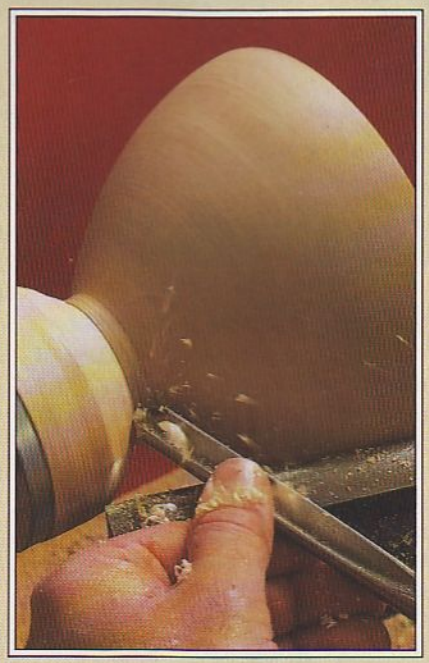

5 Now, hollow the bowl

Position the tool rest as shown *below,* and use your ½" bowl gouge to hollow-out the bowl with successive passes. Be careful to always move the gouge toward the center of the bowl. Start your first pass 1" to 2" from the center and start each successive pass further from the center than the previous pass.

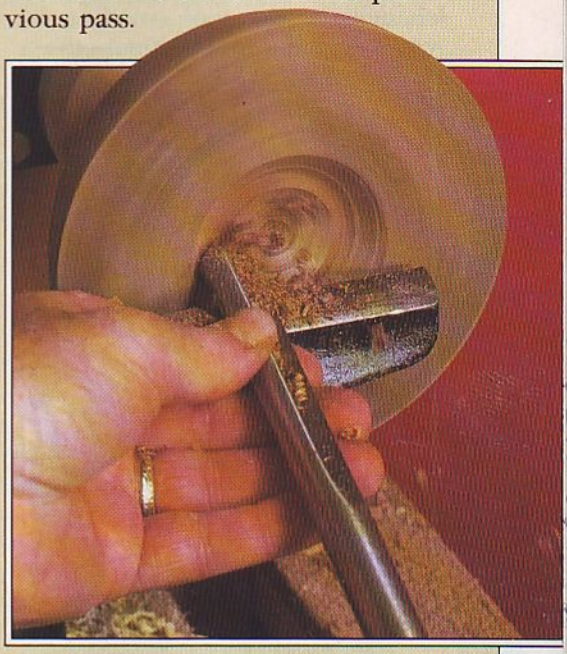

Turning tools can catch the inside walls of a bowl easily as you approach the finished shape. To prevent this from happening, remember to ease the tool into each cut, keep the bevel against the workpiece, and position the tool rest close to the workpiece. Some lathes accept S-shaped tool rests just for bowl turning.

When you hollow-out the bowl to a thickness of about ½", stop the lathe and check the thickness of the entire wall with a double-ended calipers as shown *below.*

Continued

BLANK TO BOWL

Restart the lathe and remove material as necessary to create a uniform wall thickness.

To help successfully complete your last cuts, use a parting tool to make a ⅛"-deep rabbet along the inside of the bowl's rim as shown *below*. This rabbet provides a good surface for your gouge's bevel to start on, and reduces the chances of the tool catching as you begin the touchy final cuts.

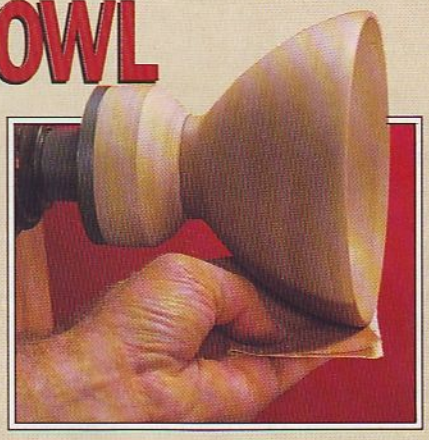

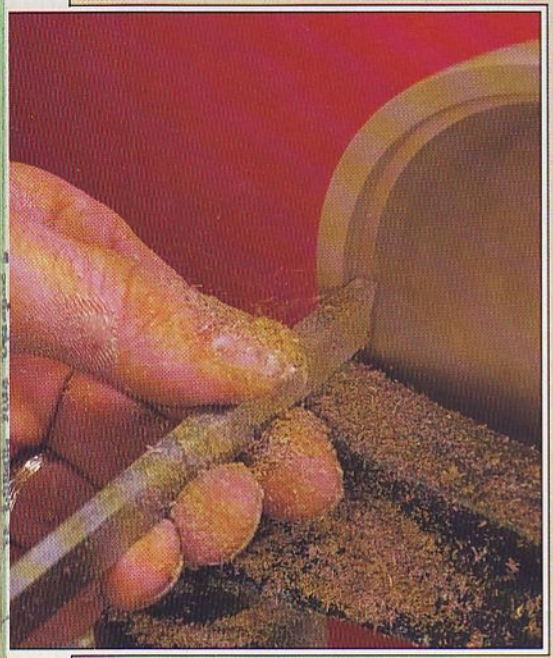

Switch to your ⅜" bowl gouge, take light cuts, and frequently check the wall thickness for uniformity. Stop cutting after you achieve a ¼"-thick wall that's free of ridges and valleys. Then, slightly round-over the rim of the bowl.

6 Sand the bowl smooth

Move the tool rest well away from the bowl and adjust the lathe's speed to about 1,800 rpm. With the bowl spinning, smooth its outside surface by holding 80- or 100-grit sandpaper underhand, the way that you would throw a softball, as shown *above center*. (It helps to fold the sandpaper over to prevent hot spots at finger locations.) Continue to smooth the bowl with a succession of 150- and 220-grit abrasives.

Repeat these sanding steps on the inside of the bowl by holding the sandpaper as shown *below*. Use your left hand to steady the bowl, and be careful not to exert too much pressure on the sandpaper. Never hold the sandpaper on the far side of the bowl, or on its top; this increases the chances of the paper grabbing, which could lead to injury.

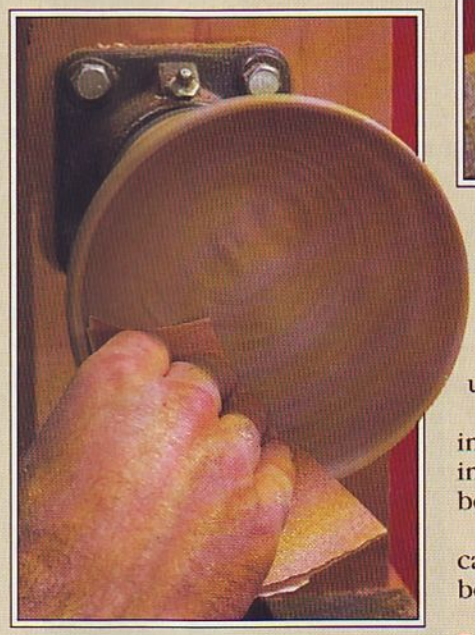

7 Finish your masterpiece

With the bowl spinning at your lathe's lowest speed, apply light coats of a clear finish by brushing, wiping, or spraying. This way, the finish goes on evenly. Be careful, though, to protect nearby surfaces from droplets of finish. Between coats, and with the bowl spinning, smooth the finish with a fine-grit abrasive or 0000 steel wool.

8 How to remove the bowl from the lathe

Secure the tool rest near the faceplate, and set the lathe's speed at about 1,200 rpm. With a parting tool, make a cut between the bowl and faceplate as shown *below*. Hold the parting tool with your left hand and steady the bowl with your right hand. Make the cut slightly wider than the tool to prevent the tool from binding.

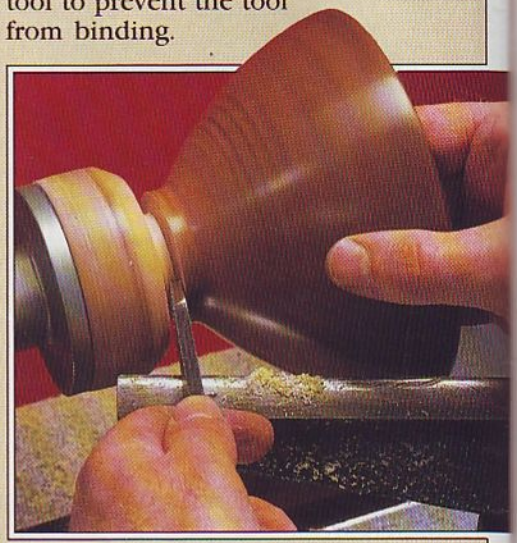

As you part the bowl, slightly angle the parting tool to the base (about 5° to 10°). This technique produces a concave bottom that helps the bowl sit upright and wobble free.

When you complete the parting, the bowl will rotate off and into your hand. Grab the spinning bowl; it won't hurt a bit.

Finally, sand smooth the concave bottom, sign and date the bottom, and add the finish.

Buying Guide

• **Bowl blanks,** 7–8" in diameter and 3½–4" thick in walnut, cherry, or butternut, $9 each postage paid from Johnson Wood Products, R.R. 1, P.O. Box 69, Strawberry Point, IA 52076; phone 319/933-6504. Call or write for prices and availability of other sizes and domestic species.

Written by Bill Krier with Marlen Kemmet
Photographs: John Hetherington
Illustrations: Kim Downing

ASK WOOD

Whether your woodworker's license reads "Beginner," "Intermediate," or "Advanced," you're bound to have a few questions about your favorite hobby. We can help by consulting our staff and outside experts. Send questions to:

Ask WOOD
Better Homes and Gardens®
***WOOD*® Magazine**
1912 Grand Ave.
Des Moines, IA 50309-3379

Get insured to avoid getting nailed

I make and sell wooden toy trucks, cars, airplanes, and ferry boats. Recently, I was advised by a lawyer to buy liability insurance. First: Do you advise people who make and sell wooden toys to carry liability insurance? Second: Do you know of any insurance companies that are willing to insure a small business such as mine?

—George Garrels, Eastsound, Wash.

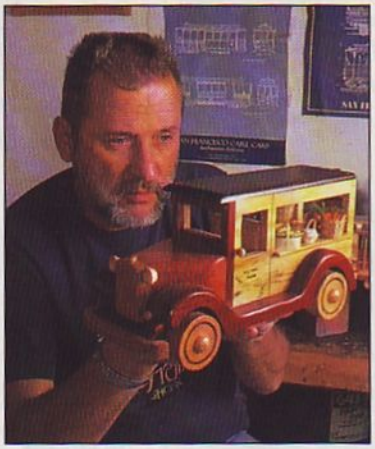

Yes, George, you definitely want liability insurance, or some way to limit your exposure in case of a lawsuit, says Hank Gorczynski, a professional toymaker featured in our August 1992 issue. "Product liability insurance covers me for about anything that could happen involving a toy that I make and sell. I'm covered for $250,000, which costs me about $500 a year, which is based on gross sales," Hank says. Because Hank also sells many of his collectible toys at arts and crafts shows, he also has another liability insurance policy that specifically covers his booth.

Gladbrook, Iowa knifemaker Walt Easley (August 1989 issue) also carries product liability insurance. "My product liability is classified under kitchen utensils because no one will insure me as a knifemaker." His coverage, also for $250,000, costs about the same as Hank's.

To find an insurer, we suggest starting with your insurance agent. Most insurance companies can write product-liability insurance.

Another method of limiting liability is to build your toys according to specifications set by the U.S. Consumer Product Safety Commission, Washington, DC 20207. Just write them and ask for "Regulations for toys and children's articles."

Edging plywood? Use a spline joint

I'm planning to build a coffee table with a plywood top. I'd like to edge it with solid oak. Seeing that the grain would run in opposing directions on the ends, should I glue the solid oak directly to the plywood, making a solid top, or, perhaps "float" the panel? Or, should I use dowels in oblong holes so the edging frame could shift as necessary? What's the right approach?

—Randy Jensen, Covenna, Mich.

Because plywood is dimensionally stable in all directions, Randy, swelling and shrinking occur only minimally. So, a floating panel or dowels in oblong holes aren't necessary. A spline joint will work best for you in this situation, especially if you miter-cut the corners of your edging. To make a spline joint, cut matching grooves in the pieces that you intend to join, using a router or tablesaw. Then cut your spline (typically, a thin strip of wood) to fit the grooves, making it 1/16" narrower than the combined depth of the grooves. Next, test-fit the pieces, adjust them if necessary, and glue and clamp the whole assembly.

Loosen old joints with a solid blow

I'm taking apart our dining room chairs because many of the joints are loose and need regluing. However, some of the joints remain very tight. How can I loosen them?

—Bernard Demuth, Edgerton, Minn.

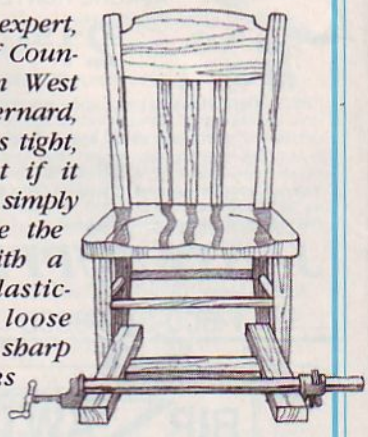

We talked to refinishing expert, Ron Stookey, co-owner of Country Caboose Antiques, in West Des Moines, Iowa. And Bernard, he advised, "If the joint is tight, don't take it apart. But if it appears loose, or you simply must take it apart, give the joint a sharp blow with a lead-pellet hammer [plastic-coated hammer with loose pellets in the head]." A sharp blow at the joint breaks the glue bond without damaging the chair.

If you just can't bear to strike your chairs, take a pipe clamp and three pieces of scrap wood, and arrange them as shown. Then, very slowly apply pressure against the legs and joints.

Yet another approach is to soften glue joints with vinegar (for modern-type glues), or denatured alcohol (for older, animal-based glues). You'll probably need a syringe to inject the solvent into the joint. After that, just a hammer blow or two as described above should separate the joint members.

WOOD sorts the grades

When I buy select or better, or any other grade of hardwood boards, I don't know what to expect. I suspect that some of my suppliers don't know how to grade either. "Clear" to me implies only slight, occasional features. As for the softwoods, I'm also in the dark. Can you help?
—Bill Day, Charlottesville, Va.

Bill, once you study the table at right, you'll see the grade differences. If you like, clip the table and stick it in your billfold. Then, the next time you buy lumber, you can examine it on the spot for defects to see if those boards truly make the grade. Also, consider buying the next grade down and doing your own trimming and upgrading. You can save big money this way, and it won't take away from your project.

Grade	Characteristics
HARDWOODS **First and Seconds (FAS)**	The best grade. Boards usually 6″ and wider, 8′ and longer. Almost clear. Yields 83⅓ percent of clear face cuttings 4″ or wider by 5′ or longer and 3″ or wider by 7′ or longer.
Selects	Boards are 4″ and wider, 6′ and longer. One side is FAS, the other is No. 1 Common. Yields 83⅓ percent clear face cuttings.
No. 1 Common (Thrift Grade)	Boards are 3″ and wider, 4′ and longer. Economical alternative for some uses. Yields 66⅔ percent of clear face cuttings 4″ or wider by 2′ or longer and 3″ or wider by 3′ or longer.
SOFTWOODS **C Select and Better**	Minor imperfections.
D Select	A few sound defects.
3rd Clear	The best shop grade. Acceptable for cabinets. Well-placed knots allow for high percentage of clear cuts.
No. 1 Shop	More knots and fewer clear cuts than 3rd Clear.
Nos. 2 and 3 Common	The so-called shelving grades. No. 2 has fewer knots than No. 3.
For more information contact: National Hardwood Lumber Association, Box 34518, Memphis, TN 38184-0518	

Weekend Woodworking Projects Back-Issue Sale

Hurry while supplies last! You can order the issues listed below. We will process orders on a first-come, first-serve basis, and when the magazines are gone, that's it.

☐ #1 Helicopter pull toy, country spice rack, cutting board, decorative sleigh, candle sconce, pocket-watch clock.

☐ #2 Rose jewelry box, arched-top clock laminated napkin rings, penguin push toy, message center, jelly-bean machine.

☐ #3 Sportsman's coatrack, lidded bowl, toy tractor, desktop name plate, decorative rocking horse, teddy-bear bookshelf.

☐ #4 Salt-and-pepper set, heart bird feeder, honeybee pull toy, dresser mirror, crayon caddy, towel ring, duck-motif house sign.

☐ #5 Adirondack chair, footstool, bandsawed basket, plant stand, oak casserole server, acorn box.

☐ #6 Scandinavian candle holder, door harp, snack tray Ferris wheel, bandsawed box, music box.

☐ #7 Mission-style bookcase, carved fruit magnets, country basket, kid's lamp, quilt hanger, handsaw bookends.

☐ #8 Armored-car bank, coaster set, whale stamp box, turned biscuit cutter, serving tray, table lamp.

☐ #9 Redwood bench, marble game, toy dining set, barn birdhouse, carousel, clown night-light.

☐ #10 Child's rocker, hourglass, antique clothes rack, wall plaque, planter basket, butter churn.

☐ #11 Country wood quilt, plate rack, rubber-band dragster, pineapple bookends, heron wall clock, turned eggs and bowl centerpiece.

☐ #12 Holiday blocks, doll cradle, teleidoscope, tree candle holder, shadow box, acrobatic clown toy, wooden jewelry.

☐ #13 Mortar and pestle, wall mirror, fish cutting board, grasshopper toy, dovetail shelving, lantern.

☐ #14 Two-part patio chair, tone box, carved spoon, rocking cow, gardener whirligig, baseball bat.

☐ #15 Corner cabinet and shelf, basketball clothes tree, folding snack table, keepsake box, candle lantern, U.S. puzzle.

☐ #16 Porch swing, stately outdoor planter,King Arthur's toy castle, country cabinet, alpine-ride toy, crumb-box cutting board.

☐ #17 Cat-in-the-window intarsia, book photo album, key keeper, oak tavern mirror, wiggle-worm pull toy, child's tote box.

☐ #18 Faux-granite mantel clock, turned walnut telephone, fighter-plane toy, chip-carved snowman, cup-and-saucer display cabinet, carved Noel.

☐ #19 Matching mirror and shelf, fashion-doll armoire, sweetheart keepsake box, mission-style telephone table, tambour recipe box.

☐ #20 Puzzled pussycat, red-hot fire truck toy, country clock with shelves, scoop chair, gateleg table, bat-ball-glove rack.

☐ #21 Toddler town car, chair-rail picture frames, hearts-and-flowers trivet, farmyard shadow box, fireboat lamp, salad servers, patio cart.

☐ #22 Jewelry chest, pumpkin-shaped plant pots, dinosaur pull toy, business-card case, lighted address sign, trumpeter-swan mobile, mission-style oak coffee table.

☐ #23 Noah's ark over-the door plaque, dart-board cabinet, candle sconce, fashion-doll bed, laminated stack bowls, four-piece desk set.

☐ #24 Christmas tree ornaments, tambour mantel clock, carousel toy, table set, ladder shelf, Santa puzzle, holiday lawn ornaments.

☐ #25 Muffin stand, cedar hangers, heron trinket box, puzzlestool, window valance, keeping trunk.

☐ #26 Napkin holder, golfer whirligig, recipe box, welcome sign, giraffe toy organizer, birdhouse, country corner table.

☐ #27 Train- puzzle pull toy, display table, outdoor planters, Hummingbird feeder, lath-art rocking horse wall hanging, mission-style wall clock.

☐ #28 Flower cart, toy auto transport, wash stand, lap desk, money clips, cutting board.

☐ #29 Mission-style library table, Shaker stool, plane puzzle, spool rack, scrollsawed dancing penguins, squirrel feeder, whatnot shelf.

☐ #30 Christmas-tree candy dish, country apple tray, earring cabinet, scrollsawed ornaments, carved nativity, wooden postcards, doll hutch.

☐ #31 Tall mirror, Chinese checkers, 4-drawer shelf, plate cabinet, peacock centerpiece, notepad holder with scrollsawed name.

Name _____

Address _____

City _____

State _____ Zip _____

☐ VISA ☐ MasterCard Exp. Date _____

Credit Card # _____

Signature _____

Single issues @ **$4.95** ppd. For foreign orders, please add $1 per issue.

Circle the issue(s) you wish. 1 2 3 4 5 6 7 8 9 10 11 12 13 14 15 16 17 18 19 20 21 22 23 24 25 26 27 28 29 30 31

How To Place Your Order
Fill out this form. Send the order form to: **Weekend Woodworking Projects Back-Issue Sale, P.O. Box 9266, Des Moines, IA 50306-9266.** Send check for payment with this form or use your Credit Card for faster processing of order. Allow 4-6 weeks for delivery. Phone credi-card orders: 800/572-9350!

WOOD ANECDOTE

CEIBA THE SEAMAN'S SAVIOR

Ceiba saved the lives of sailors from sinking ships.

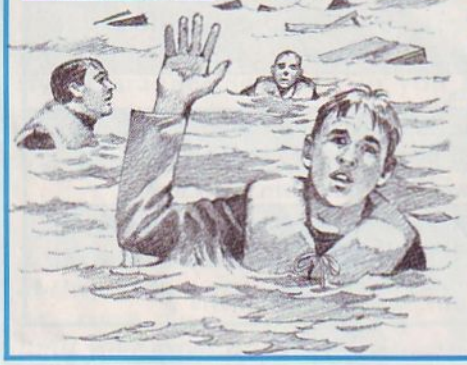

According to an ancient myth of the Mayan people of southern Mexico, man orginally sprang from a giant tree. So, thereafter, they held that tree sacred. The revered tree, one of the largest in all of tropical America, was the ceiba (*Ceiba pentandra*).

Ceibas can grow to 150′ heights and diameters of 7′, with a cylindrical trunk that may even bulge somewhat above the base. Because of the tree's size, its habit of branching at distinct right angles to the trunk, and ample foliage, it offers lots of shade. For this reason, you'll find ceiba trees planted in the busy market squares of towns throughout Mexico and South America.

Locally, ceiba's straight-grained, pinkish-white heartwood becomes plywood and plywood core stock, lumber for light construction, and paper pulp. Natives also rely on ceiba for rafts and canoes. In fact, its use is so widespread in Guatemala that ceiba has become the national tree. But little ceiba wood ever gets far from its native land. Instead, the tree has earned world-wide recognition for a fluffy by-product.

Ceiba trees, it seems, annually form large black seed pods a few months after their leaves fall. The pods contain a light, bouyant floss just perfect for stuffing sleeping bags, mattresses, and pillows. And before its almost total replacement by man-made materials, the floss—called kapok—filled millions of life jackets and preservers. And these, in turn, saved untold sailors from watery graves on the world's high seas.

Illustration by Jim Stevenson

BUILDING OUR NAME...

BUILDING YOUR DREAMS...

ONE YEAR WARRANTY

SALE

WIDE BELT SANDER

CT-2575 24"..... $4290
CT-3775 36"..... $5390

SHAPER

SP-3400 1.5 HP..$469
SK-30SPA 3 HP.. $849
SP-34T TILTING..$1695

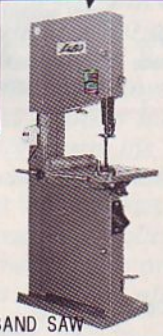

BAND SAW

BS-1316 16".... $299
BS-0163 16" $499
BS-0183 18" $649
BS-0202 20" $1290

TABLE SAW

HTS0012 12"..... $789
TS-1010 10"..... $1295
TS-1414 14"..... $2690

JOINTER

JT-1007 7"..... $309
JT-1008 8" $639
JT-0012 12".....$1895

WE SPECIALIZE IN CUSTOMER SATISFACTION

LOBO

9034 Bermudez Street,
Pico Rivera CA 90660
MAIN OFFICE:(213)949-3747
ATLANTA:(404) 416-6006
(800)786-5626 (order only)

LOBO POWER TOOLS

PART III

If You *SNOOZE*... You'll Lose

12 Volt 3/8 In. VSR Cordless Drill/Driver

- More power and torque than any cordless in its class. 140 max. watts out.
- Versa-Clutch - automatically adjusts torque.
- Pressure-Activated Chuck
- Clutch-Lock shifts from drilling to driving.
- Synchromesh Gears.
- Steel kit box included.

CALL NOW
1-800-888-7271
TO PLACE ORDER

Now Have 12V of Super Cyclone Power

BLACK & DECKER

We bought all the factory had to offer to give you this

Super Cyclone

Special Christmas Pricing

LIST: $284.00 SPECIAL $129 ppd.

Need an extra battery? With the purchase of the Super Cyclone we've reduced your battery cost to just $35.00 ea. List $61.00 (#98050)

PHILIPPS BROS. SUPPLY, INC.

Construction and Industrial Supplies

2525 KENSINGTON AVE. • AMHERST, NY. 14226-4999 • 716/839-4800
CALL TOLL FREE 1-800-888-7271 • FAX: 716/839-4051
Store Hours: Mon., Tues., wed. & Fri. 7:30 am-5:30 pm
Thurs. 7:30 am-8:00 pm Sat. 9:00 am-3:00 pm

VISA

FINISHING TOUCHES

WARY ARIZONIANS WATCH WASPS

Central Arizona home-builders—and new-home owners—sometimes face a stinging problem. According to the Western Wood Products Association (WWPA), horntailed wasps frequently infest weakened or dying pine trees.

The larvae burrow deep into the tree, surviving even harvest and sawing. When the infested lumber becomes framing, the now-mature wasp escapes right through the wood, even the drywall, flooring, and woodwork!

The WWPA says that the wasp does no structural damage. Still, entomologists and the WWPA are keeping an eye on them.

WHAT WILL YOU BID?

On Sunday, December 6, there'll be bidders aplenty in Silver Dollar City's Grand Palace at Branson, Missouri, for the 1992 Crafted for Joy toy auction, hosted by Louise Mandrell. Proceeds from the toys—entered by readers in *WOOD*® magazine's annual Build-A-Toy contest—go to the Marine Corps Reserve's Toys-for-Tots program. For details, call 417/338-8210.

FRONT & CENTER
WOODWORKERS WHO MAKE A DIFFERENCE

A Saturday finds, from left, woodworkers Otto Kantrell, Bob Lamons, Bob Ludwig, and leader Dean Hawley working on Up With Trees signs.

Name: Green County Wood Workers
Age: 35 to 77
Home: Tulsa, Oklahoma area
Occupation: Hobby woodworkers all

During its 10-year history, Tulsa's Green County Wood Workers have earned local accolades as toymakers. In 1991, for instance, the members contributed about 1,000 handcrafted toys to the Salvation Army. Now, for helping out a volunteer tree-planting organization, their reputation includes signmaking, too.

Up With Trees, a non-profit group committed to beautifying Tulsa and its freeways, plants donated trees around the community. And the Green County Wood Workers build and erect signs at planting sites that salute the greening effort.

"Members of the Green County Wood Workers have unselfishly volunteered their time and skills in completing over 40 signboards in the last year," says Tom Freeman, president of Up With Trees. "That they would generously share their talents and time to assist our efforts for Tulsa deserves special recognition and commendation. Their current officers are Mike Veteto, president; Michael Lunsford, vice president; and Jerry Tilley, treasurer."

According to Tom, the woodworkers meet on Saturdays at the home of Dr. Dean Hawley, the club's sign-project leader. There, they lay out, rout, sand, and paint the 10′-long signboards, which they cut from donated lumber.

With efforts like these, Tulsa no doubt will get a whole lot greener. Way to go, sponsors, planters . . . and woodworkers!

Want to contact the Green County Wood Workers? Write them at P.O. Box 470856, Tulsa, OK 74147-0856.

Do you know a subscriber who makes a difference? Write: Front and Center,* WOOD *magazine, 1912 Grand Ave., Des Moines, IA 50309-3379.

THE STORY BEHIND PISTOL-PACKING WOODWORKERS

With a grip and trigger based on the Colt .45 pistol, Black & Decker's ½" portable electric drill was marketed in 1916, then patented in 1917 as the world's first.

It was 1914, and Duncan Black and Alonzo Decker were owners of a small, four-year-old manufacturing company in Baltimore, Maryland. Both were inventors, constantly trying to improve the products they manufactured, as well as develop new items.

Photographs: Bob Hawks; Black & Decker

Their then current problem involved how they might improve upon the cumbersome electric drill of the day—a machine that required at least two men to handle. Late one Saturday night, while they sat at Decker's kitchen table, the men chanced to discuss the design of the popular Colt .45 automatic pistol.

According to Alonzo G. Decker, Jr., son of the founding partner of the now world-renown Black & Decker Corporation, the two men arrived at the solution simultaneously. "They looked at the gun, then at each other, and said, 'That's it! A pistol grip with a trigger switch!' "

Three years later, Duncan Black and Alonzo Decker received a U.S. patent for the world's first pistol-grip, trigger-switch electric drill, shown *left*. This year Black & Decker celebrated the 75th anniversary of that first portable electric drill with commemorative tools that include two chuckless corded drills, a chuckless cordless drill, and drill bit sets.

Illustrations: Jim Stevenson